AERO 130

Release 2.0

Preventive Care & Spare Parts

ITW TRANS TECH, An Illinois Tool Works Company, 475 North Gary Avenue, Carol Stream, IL 60188-4900

Phone: 630.752.4000 Fax: 630.752.4460 Web **Site:** www.itwtranstech.com

Preventive Maintenance

- Test both side covers (guards) to make sure that the switches are operational.
- Test E-Stop functionality.
- Drain filter/regulator bowl as necessary.
- Verify the proper operation of the printer.
- Keep the Cliché Support (9902-29-000) clean and free of ink buildup.
- Lubricate the horizontal guide shaft (Dwg. 9902-27-000 Item# 22) and the vertical guide shafts (9902-33-000 Items# 5) every 500 hours of operation. (McMaster Carr p/n 1200K21 recommended.)

Recommended Spares

Description	Drawing Number	Item Number
E-stop assembly	9902-03-000	15
130 Cup Holder assembly	9902-30-002	1
Shock Absorber	230-01-040	19
Shock Absorber	230-01-041	40
Proximity Switch, Magnetic	p/n 332-33-001	
Reed Switch,24vdc	p/n 332-08-017	

List of Drawings

Drawing Number	Description
9902-01-000R	AERO 130 RAW
9902-03-000	AERO PAD PRINTER 130 – BASE MODEL
9902-15-000	SCALE ADJ. ASSY
9902-22-000	PAD CYLINDER ASSY
9902-23-000	CUP DRIVE – 130
9902-27-000	CUP DRIVE SLIDE ASSY
9902-28-000	PART SUPPORT ASSY, STANDARD
9902-29-000	CLICHÉ SUPPORT – ITW – 130
9902-30-000	SETUP TABLE ASSY 130
9902-30-002	130-CUP HOLDER ASSY
9902-33-000	PAD – RAM SLIDE ASSY
9902-40-000	FRAME ASSY
9902-80-000	BRACKET – CONTROL MTG ASSY
9902-81-000	ELECTRICAL ASSY
9902-91-000	PNEUMATIC ASSY

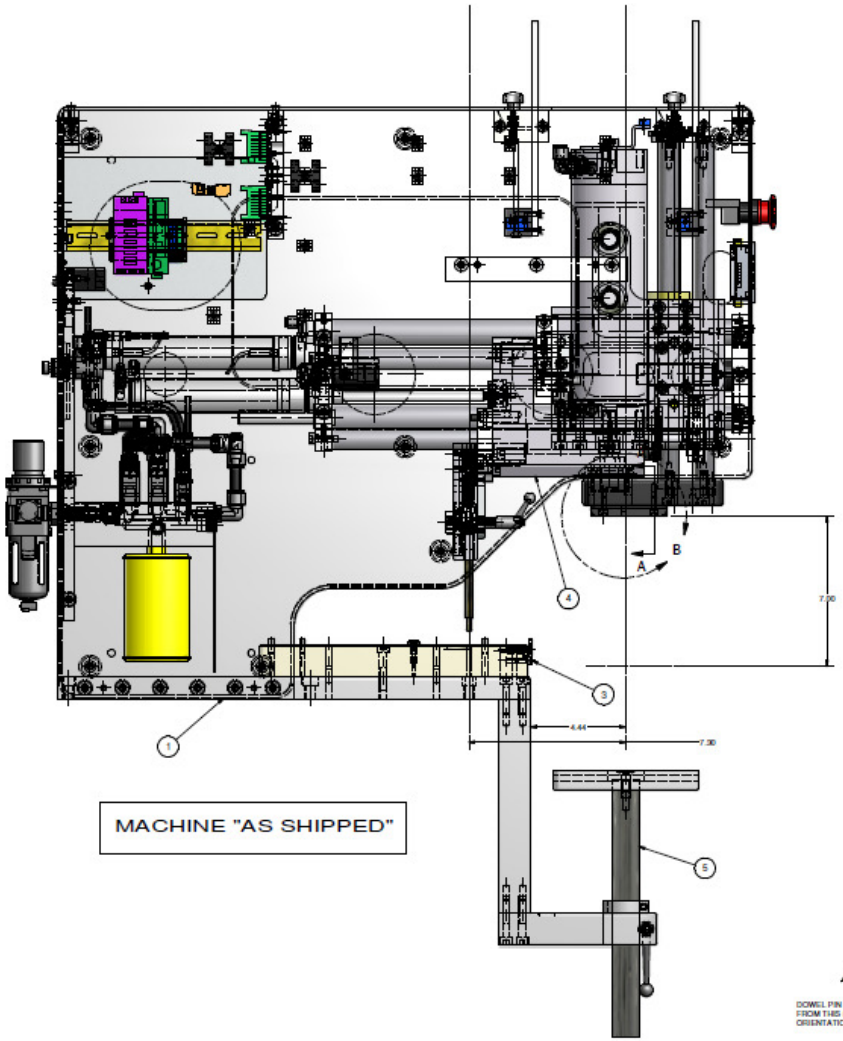

MACHINE "AS SHIPPED"

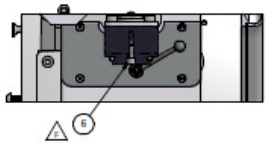

SECTION A-A
SCALE .375

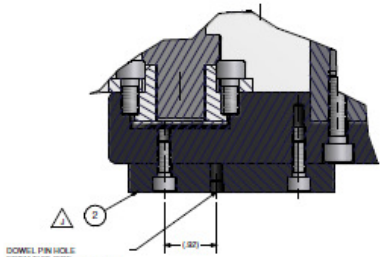

DOWEL PIN HOLE
FROM THIS SIDE
ORIENTATION IS IMPORTANT

DETAIL B
SCALE 1

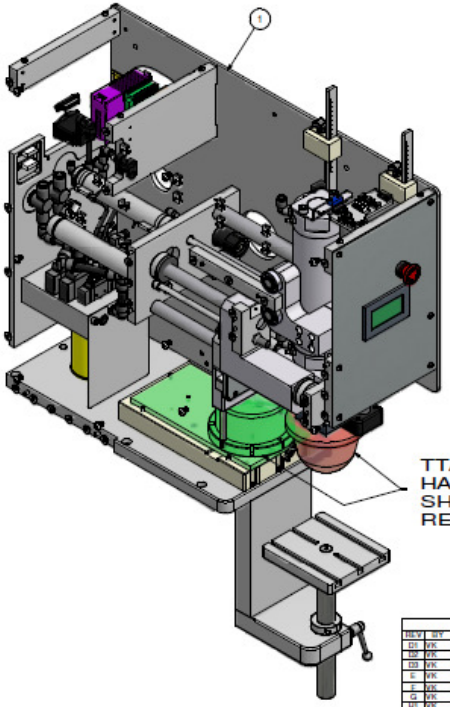

TTA
HARDWARE
SHOWN FOR
REF. ONLY.

Parts List

ITEM	QTY	PART NUMBER	DESCRIPTION	VENDOR
1	1	9902-03-000	AERO PAD PRINTER - 130- BASE MODEL	
2	1	9902-00-001	BRACKET - PAD MOUNT	
3	1	9902-28-000	CLICHE SUPPORT - ITW - 130	
4	1	9902-27-800	CUP DRIVE SLIDE ASSY	
5	1	9902-28-000	PART SUPPORT ASSY, STANDARD	
6	2	91290A321	M6 x 16 LG. SHCS	MCMASTER

HARDWARE REQUIRED BUT NOT SHOWN

QTY	PART NUMBER	DESCRIPTION	VENDOR
1	2146113	15 PIN MALE CONNECTOR	MCMASTER
2	MC10M	10 CONNECTOR CABLE	DIGIKEY
6	CKC1050	10 PIN IDC CONNECTOR	DIGIKEY
5	MC15M	15 CONNECTOR	DIGIKEY
2	251-103/103-000	3 PIN CONNECTOR	WAGO

REVISION HISTORY

REV	BY	DATE	DESCRIPTION
D1	VK	4/24/2009	ADDED REV-C
D2	VK	4/24/2009	ADDED REV-D
D3	VK	4/29/2009	ASSED REV-C
E	VK	5/22/2009	ADDED REV-D
F	VK	8/18/2009	ADDED ITEM #7
G	VK	8/17/2009	NEW DESIGN
H1	VK	5/6/2010	NEW NAME
H2	VK	5/6/2010	ADDED TTA PART No.
I	VK	8/12/2010	ADDED VENDOR
J	VK	10/12/2010	IA TEST UPDATES

REF: 9902-05-000

QUANTITY PER ASSY: 1

CAD FILE NO.: HS9.00.00

PROJ.:

DETAIL NAME: AERO 130 RAW

MAT'L FINISH: NONE

HEAT TREAT: NONE

MATERIAL: SEE PARTS LIST

CHECKED: SCALE: 2:8 BY: Vito DATE: 2/23/2009

SIZE: D DRAWING NO.: 9902-01-000R REV.: J

ITW TRANS TECH PROPRIETARY

THIS DOCUMENT CONTAINS CONFIDENTIAL, PROPRIETARY INFORMATION THAT IS ITW TRANS TECH'S PROPERTY. DO NOT REVEAL OR DISCLOSE OR REPRODUCE IN WHOLE OR IN PART WITHOUT WRITTEN APPROVAL FROM ITW TRANS TECH

TOLERANCES UNLESS OTHERWISE SPECIFIED:
.XX ±.010 .XXX ±.005
.X0 ±.005 ANGLES ±.5°
FRACTIONS ±1/64" "BREAK ALL CORNERS 1/64"

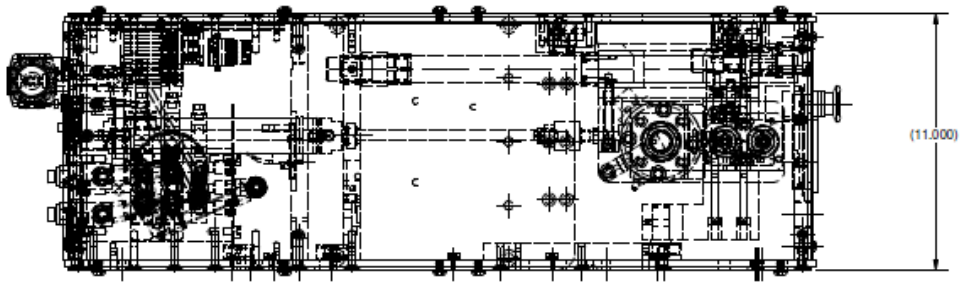

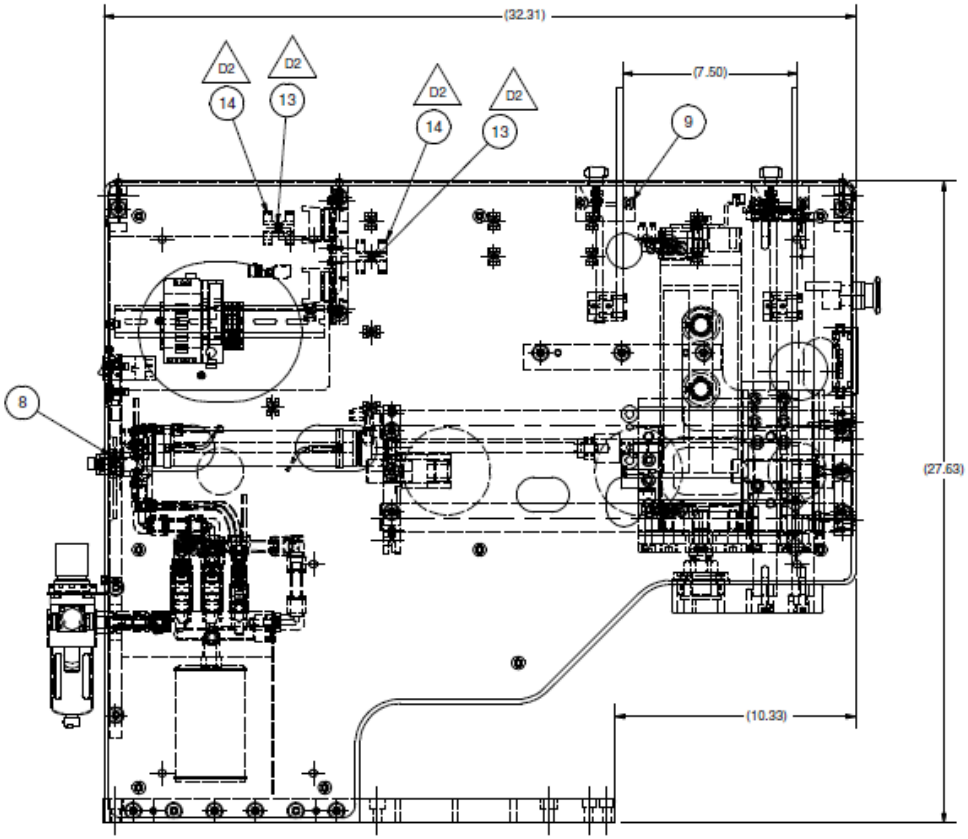

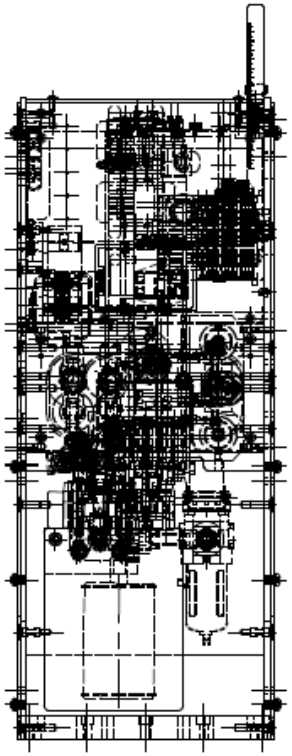

Parts List

ITEM	QTY	PART NUMBER	DESCRIPTION	VENDOR
1	1	9902-40-000	FRAME ASSY	
2	1	9902-33-000	PAD - RAM SLIDE ASSY	
3	2	9902-15-000	SCALE ADJ. ASSY	
4	1	9902-76-001	GUARD - SIDE L.H.	
5	1	9902-76-002	GUARD - SIDE R.H.	
6	1	9902-81-000	ELECTRICAL ASSY	
7	1	9902-91-000	PNEUMATIC ASSY	
15	1	D7D-MT44X02	RED E-STOP ASSY WITH N.C. CONTACTS	STANDARD
8	6	91294A286	M8 x 25 FHCS	MCMASTER
9	4	91294A240	M6 x 20 LG. SHCS	MCMASTER
10	18	91239A416	M8 x 12 MM. LG. BHCS BLACK OXIDE	MCMASTER
11	11	91239A140	M4 x 8 LG. BHCS	MCMASTER
12	11	7566K13 7130K41	CABLE STRAP CABLE TIES	MCMASTER
G 13	2	91294A196	M4 x 20 LG. FHCS	MCMASTER
G 14	2	7429K45	1/2 TO 5/8 TWO-CHANNEL PLASTIC STRAP	MCMASTER

REVISION HISTORY

REV	BY	DATE	DESCRIPTION
B1	VK	1/14/2009	NEW DESIGN
C1	VK	4/24/2009	ADDED REV-D
C2	VK	4/29/2009	ADDED REV-C
D1	VK	6/04/2009	ADDED REV-E
D2	VK	6/04/2009	ADDED NEW ITEMS
D3	VK	6/15/2009	ADDED REV-D
D4	VK	6/15/2009	ADDED REV-C
D5	VK	6/15/2009	ADDED REV-D
E	VK	5/06/2010	ADDED TTA PART No.
F	VK	8/13/2010	ADDED VENDOR
G	VK	10/05/2010	ADDED ITEMS

REF: 9902-00-001
1-REQ'D

DETAIL NAME: AERO PAD PRINTER 130 - BASE MODEL

CAD FILE NO.: H38-01-00

MAT'L FINISH: NONE

HEAT TREAT: NONE

PROJ.

MATERIAL: SEE PARTS LIST

CHECKED

SCALE: 1:4

BY: Vito

DATE: 4/1/2009

SIZE: C

DRAWING NO.: E 9902-03-000

REV.: G

ITW TRANS TECH
PROPRIETARY
THIS DOCUMENT CONTAINS CONFIDENTIAL, PROPRIETARY INFORMATION THAT IS ITW TRANS TECH'S PROPERTY. DO NOT DISCLOSE OR DUPLICATE FOR OTHERS EXEPT AS AUTHORIZED BY ITW TT.

TOLERANCE UNLESS OTHERWISE SPECIFIED:
.XX ± .010 .XXXX ± .0005
.XXX ± .005 ANGLES ± .5°
FRACTIONS: ± 1/64" BREAK ALL CORNERS 1/64"

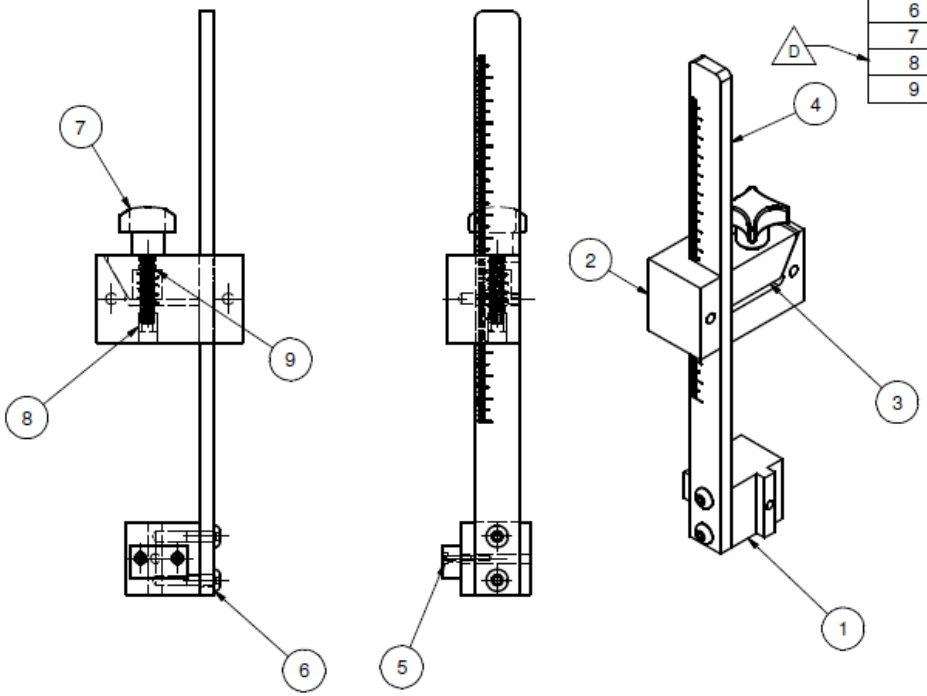

Parts List

ITEM	QTY	PART NUMBER	DESCRIPTION	VENDOR
1	1	9902-15-001	PLATE - SENSOR MAGNET	
2	1	9902-15-002	BRACKET - SCALE LOCATOR	
3	1	9902-15-003	CLAMP - SCALE	
4	1	9902-15-004	SCALE	
5	2	91290A103	M2.5 x 10 LG. SHCS	MCMASTER
6	2	91290A232	M5 x 16 LG. SHCS	MCMASTER
7	1	6390K52	FOUR ARM KNOB	MCMASTER
8	1	92396A127	PRESS FIT INSERT - M6 THREAD x 8mm LG.	MCMASTER
9	1	9657K155	3/8 O.D. x 1-1/4 L.G. x .035 W.D. COMPR. SPRING	MCMASTER

REVISION HISTORY

REV	BY	DATE	DESCRIPTION
A1	VK	12/1/2008	ADDED REV-A
B	VK	5/04/2010	ADDED TTA PART No.
C	VK	8/13/2010	ADDED VENDOR
D	EH	8/30/2011	REVISED DESCRIPTION

REF: 9902-26-200
2-REQ'D

DETAIL NAME: SCALE ADJ. ASSY

CAD FILE NO.: H38-04-00

MAT'L FINISH: NONE

HEAT TREAT: NONE

PROJ.

MATERIAL: SEE PARTS LIST

ITW TRANS TECH
PROPRIETARY

THIS DOCUMENT CONTAINS CONFIDENTIAL, PROPRIETARY INFORMATION THAT IS ITW TRANS TECH'S PROPERTY. DO NOT DISCLOSE OR DUPLICATE FOR OTHERS EXEPT AS AUTHORIZED BY ITW TT.

TOLERANCE UNLESS OTHERWISE SPECIFIED:
.XX ± .010 .XXXX ± .0005
.XXX ± .005 ANGLES ± .5°
FRACTIONS: ± 1/64" BREAK ALL CORNERS 1/64"

CHECKED	SCALE	BY	DATE
	1:4	Vito	9/25/2008

SIZE	DRAWING NO.	REV.
B	9902-15-000	C

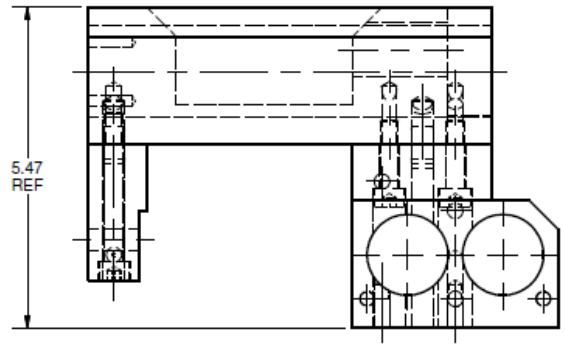

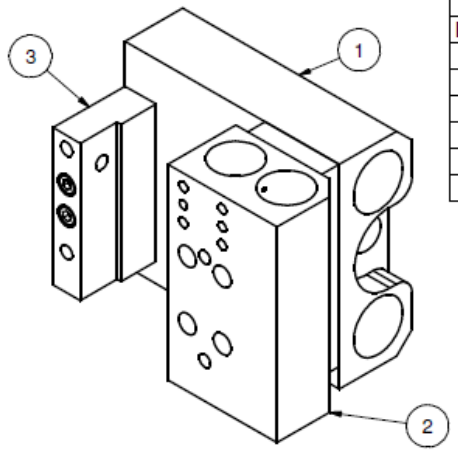

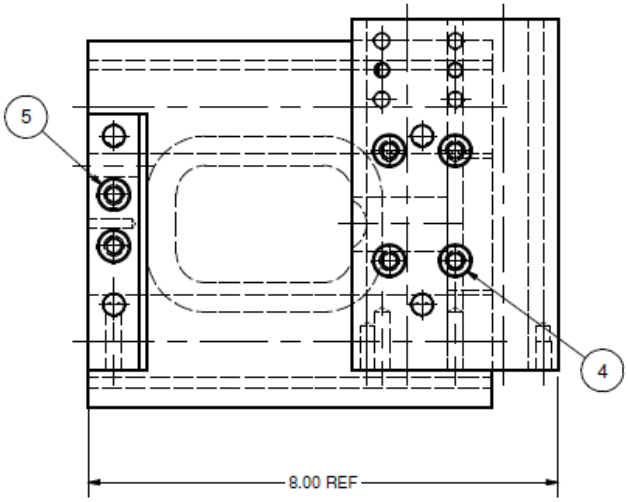

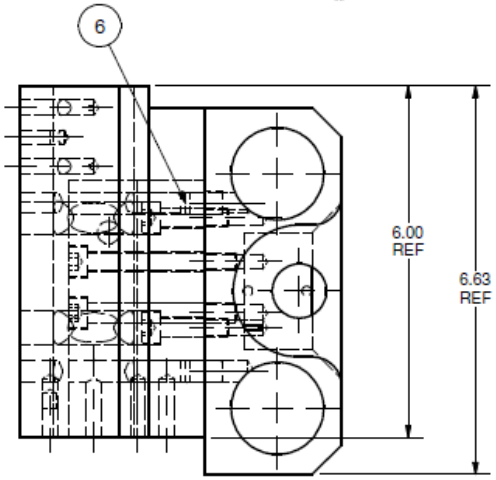

Parts List

ITEM	QTY	PART NUMBER	DESCRIPTION	VENDOR
1	1	9902-22-001	HOUSING - LINEAR BALL BRG - HORIZ.	
2	1	9902-22-002	HOUSING - LINEAR BALL BRG - VERTICAL	
3	1	9902-22-003	PLATE - SUPPORT	
4	4	91290A434	M8 x 30 LG. SHCS	MCMASTER
5	2	91290A458	M8 x 65 LG. SHCS	MCMASTER
6	4	98381A621	3/8 x 5/8 DWL PIN	MCMASTER

REVISION HISTORY

REV	BY	DATE	DESCRIPTION
A1	VK	1/13/2009	ADDED REV-A
A2	VK	1/13/2009	ADDED REV-A
B1	VK	1/26/2009	ADDED REV-B
B2	VK	1/26/2009	ADDED REV-C
C	VK	4/24/2009	ADDED REV-D
D	VK	5/05/2010	ADDED TTA PART No.
E	VK	8/13/2010	ADDED VENDOR

REF: 9902-22-100
1-REQ'D

DETAIL NAME
PAD CYLINDER ASSY

CAD FILE NO.
H38-11-00

MAT'L FINISH
NONE

HEAT TREAT
NONE

PROJ.

MATERIAL
SEE PARTS LIST

ITW TRANS TECH
PROPRIETARY

THIS DOCUMENT CONTAINS CONFIDENTIAL, PROPRIETARY INFORMATION THAT IS ITW TRANS TECH'S PROPERTY. DO NOT DISCLOSE OR DUPLICATE FOR OTHERS EXEPT AS AUTHORIZED BY ITW TT.

TOLERANCE UNLESS OTHERWISE SPECIFIED:
.XX ± .010 .XXXX ± .0005
.XXX ± .005 ANGLES ± .5°
FRACTIONS: ± 1/64" BREAK ALL CORNERS 1/64"

CHECKED

SCALE
1:2

BY
Vito

DATE
11/28/2008

SIZE
B

DRAWING NO.
D 9902-22-000

REV.
E

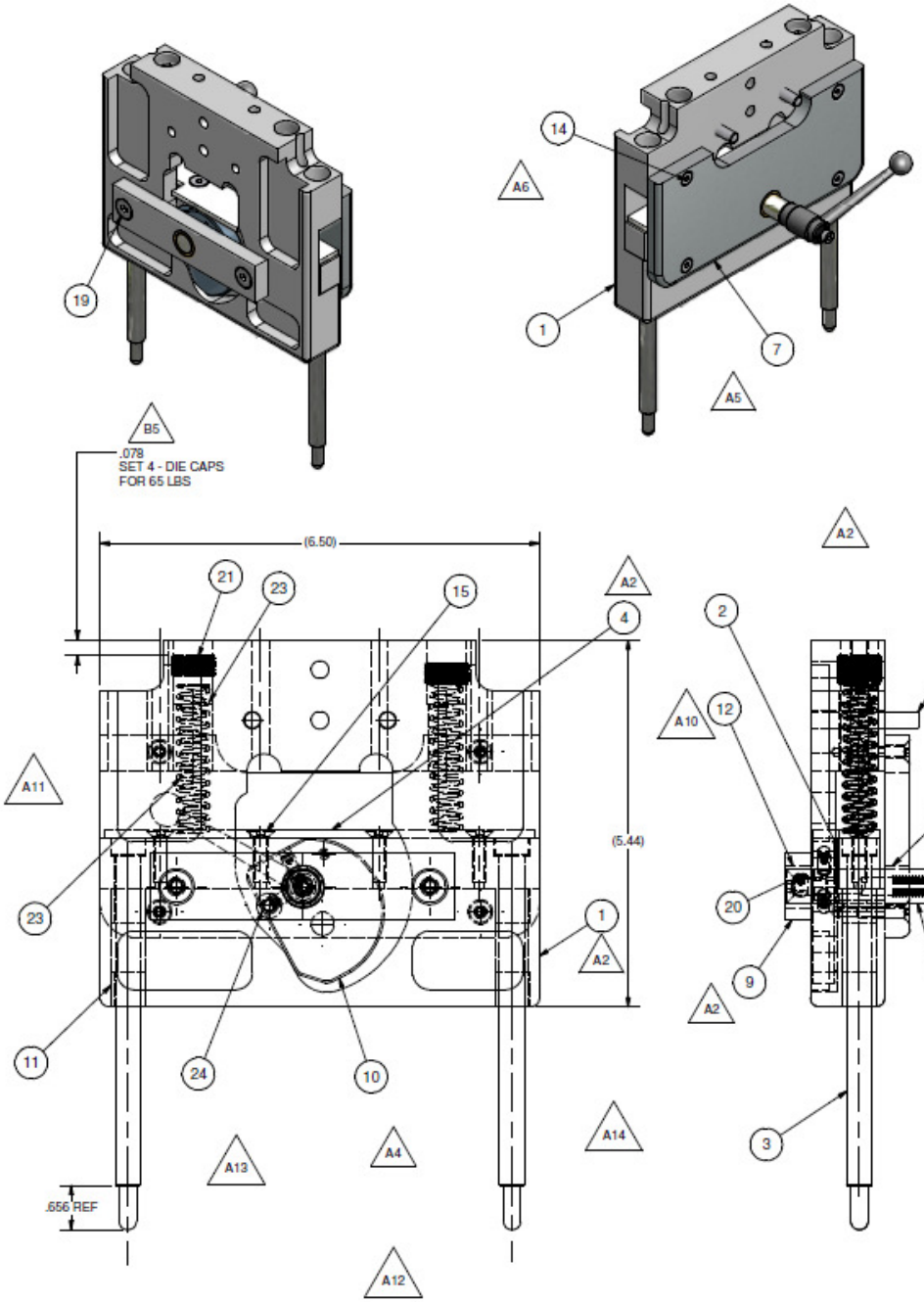

Parts List

ITEM	QTY	PART NUMBER	DESCRIPTION	VENDOR
1	1	9902-23-001	BLOCK - CUP DRIVER LIFT - 130	
2	1	9902-23-002	BRACKET - CUP LIFTERS MTG - 130	
3	2	9902-23-003	ROD - CUP HOLDER	
4	1	9902-23-004	PLATE - LIFTER - 130	
7	1	9902-23-005	GUARD - FRONT	
8	1	9902-23-006	ROD LIFTER	
9	1	9902-23-007	PLATE - CAM SUPPORT	
10	1	9902-23-008	CAM	
11	4	6391K173	3/8 I.D. x 1/2" O.D. x 1/2 LG. BUSHING	MCMASTER
12	2	6391K211	1/2 I.D. x 5/8" O.D. x 3/8 LG. BUSHING	MCMASTER
13	1	6848K44	M8 HANDLE	MCMASTER
14	4	91294A159	M4x 18 LG. FHCS	MCMASTER
15	4	91294A210	M5 x 12 LG. FHCS	MCMASTER
19	2	91294A238	M6 x 16 LG. FHCS	MCMASTER
20	3	91390A119	M5 x 8 LG. SSS FLT. PNT	MCMASTER
21	2	96235K9	5/8-18 DIE SPRG SCR CAP	MCMASTER
22	2	98381A540	1/4 x 3/4 LG. DOWEL PIN	MCMASTER
23	2	WH13-65	COMPR.SPRG METRIC 13 O.D. x 65 LG. 2.1 W.D.	MISUMI
24	1	84835A42	BALL PLUNGER	MCMASTER
25	1	91290A139	M4 x 6 LG. SHCS	MCMASTER
26	1	92153A422	M4 LOCK WASHER	MCMASTER
27	1	93475A230	M4 FLAT WASHER	MCMASTER

REVISION HISTORY

REV	BY	DATE	DESCRIPTION
A1	VK	8/9/2008	NEW HANDLE
A2	VK	8/9/2008	ADDED REEV-A
A3	VK	8/9/2008	WAS: 9901-24-005
A4	VK	8/9/2008	WAS: 9901-24-004
A5	VK	8/9/2008	NEW ITEM
A6	VK	8/9/2008	NEW ITEM
A7	VK	8/9/2008	WAS: 6391K171
A8	VK	8/9/2009	REMOVED ITEM #91290A232
A9	VK	8/9/2008	REMOVED M6x16 LG. SHCS
A10	VK	8/9/2008	WAS: 1-REQ'D
A11	VK	8/9/2008	NEW SPRINGS
A12	VK	8/28/2008	ADDED REV-A
A13	VK	8/28/2008	NEW ITEM
A14	VK	8/28/2008	NEW ITEM
A15	VK	8/29/2008	WAS #6391K117
A16	VK	8/29/2008	WAS #91294A240
B1	VK	1/13/2009	ADDED REV-B
B2	VK	1/13/2009	ADDED REV-C
B3	VK	1/13/2009	ADDED REV-A
B4	VK	1/13/2009	ADDED REV-B
B5	VK	1/13/2009	ADDED DIM
B6	VK	1/13/2009	WAS M5 x 16 LG. FHCS
B7	VK	1/13/2009	ADDED NOTE
B8	VK	1/13/2009	ADDED REV-A
B9	VK	1/13/2009	ADDED THIS ITEMS
B10	VK	1/17/2009	NEW SPRINGS
C1	VK	2/26/2009	REMOVED DET. 9902-25-505
C2	VK	2/26/2009	REMOVED DET. 9902-25-506
C3	VK	2/26/2009	WAS: 6 REQ'D
C4	VK	2/26/2009	REMOVED M8 x 25 LG. SHCS
C5	VK	2/27/2009	WAS 4 REQ'D
C6	VK	3/10/2009	WAS REV-A
C7	VK	3/10/2009	WAS 4-REQ'D
D	VK	4/24/2009	ADDED REV-C
E	VK	5/15/2009	ADDED REV-C
F	VK	5/05/2010	ADDED TTA PART No.
G	VK	8/13/2010	ADDED VENDOR

REF: 9902-25-500
1-REQ'D

DETAIL NAME: CUP DRIVE - 130

CAD FILE NO. H38-12-00

MAT'L FINISH: NONE

HEAT TREAT: NONE

PROJ.

MATERIAL: SEE PARTS LIST

CHECKED

SCALE: 3:4

BY: Vito

DATE: 7/12/2008

SIZE: C

DRAWING NO.: 9902-23-000

REV.: G

ITW TRANS TECH
PROPRIETARY
THIS DOCUMENT CONTAINS CONFIDENTIAL, PROPRIETARY INFORMATION TO ITW TRANS TECHS. PROPERTY. DO NOT USE, DISCLOSE OR DUPLICATE FOR OTHERS EXEPT AS AUTHORIZED BY ITW TT.

TOLERANCE UNLESS OTHERWISE SPECIFIED:
.XX ± .010 .XXXX ± .0005
.XXX ± .005 ANGLES ± .5°
FRACTIONS: ± 1/64" BREAK ALL CORNERS 1/64"

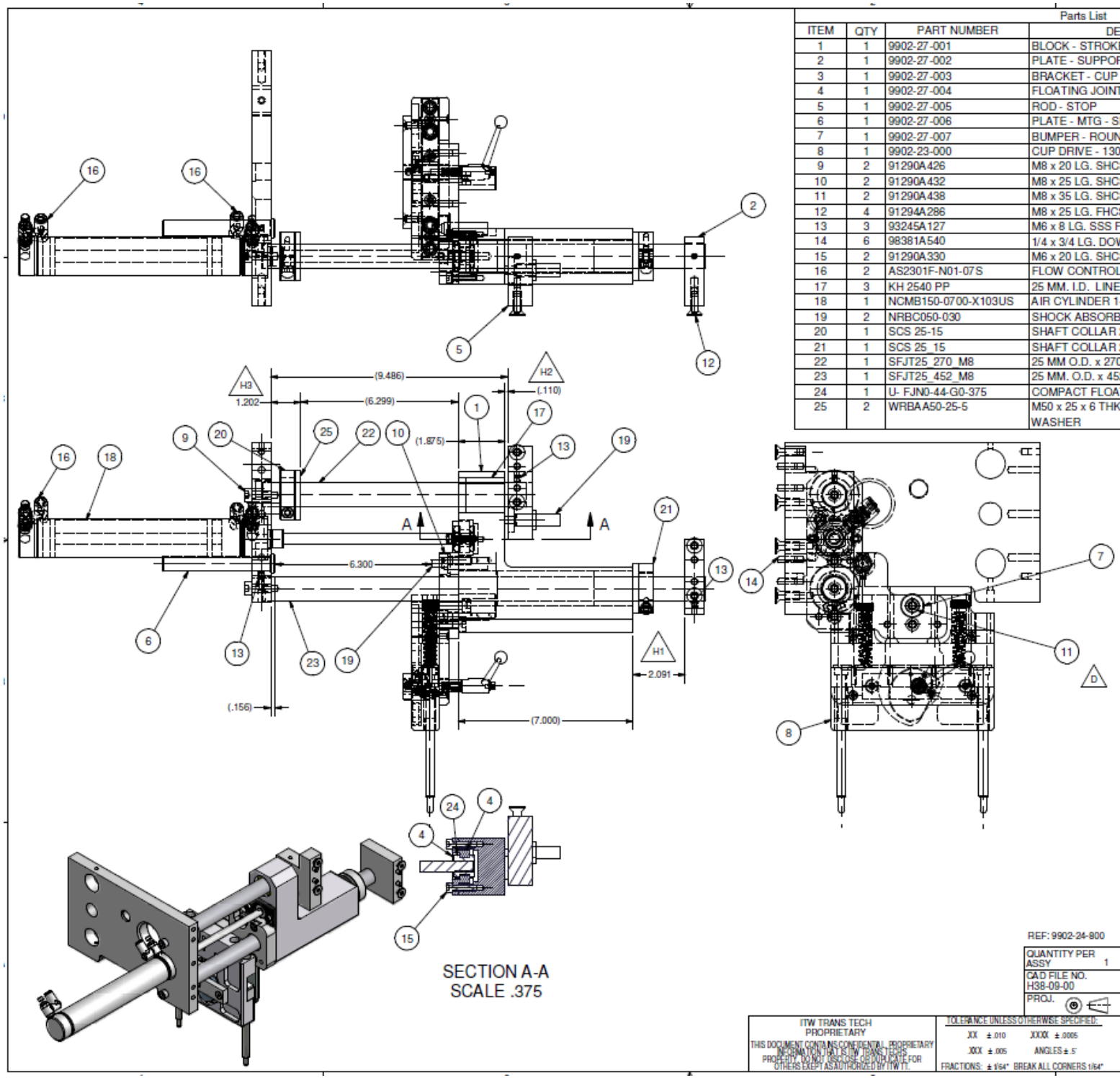

Parts List

ITEM	QTY	PART NUMBER	DESCRIPTION	VENDOR
1	1	9902-27-001	BLOCK - STROKE COMPENSATION	
2	1	9902-27-002	PLATE - SUPPORT	
3	1	9902-27-003	BRACKET - CUP DRIVE MTG. 130	
4	1	9902-27-004	FLOATING JOINT RECEIVER	
5	1	9902-27-005	ROD - STOP	
6	1	9902-27-006	PLATE - MTG - SHOCK ABSORBER	
7	1	9902-27-007	BUMPER - ROUND - 130	
8	1	9902-23-000	CUP DRIVE - 130	
9	2	91290A426	M8 x 20 LG. SHCS	MCMASTER
10	2	91290A432	M8 x 25 LG. SHCS	MCMASTER
11	2	91290A438	M8 x 35 LG. SHCS	MCMASTER
12	4	91294A286	M8 x 25 LG. FHCS	MCMASTER
13	3	93245A127	M6 x 8 LG. SSS FL. PNT	MCMASTER
14	6	98381A540	1/4 x 3/4 LG. DOWEL PIN	MCMASTER
15	2	91290A330	M6 x 20 LG. SHCS	MCMASTER
16	2	AS2301F-N01-07S	FLOW CONTROL	SMC
17	3	KH 2540 PP	25 MM. I.D. LINEAR BEARINGS	MOTION IND.
18	1	NCMB150-0700-X103US	AIR CYLINDER 1-1/2" BORE x 7" STR.	SMC
19	2	NRBC050-030	SHOCK ABSORBER	SMC
20	1	SCS 25-15	SHAFT COLLAR 25 MM.	MISUMI
21	1	SCS 25_15	SHAFT COLLAR 25 MM	MISUMI
22	1	SFJT25_270_M8	25 MM O.D. x 270 MM. LG. LINEAR SHAFT	MISUMI
23	1	SFJT25_452_M8	25 MM. O.D. x 452 MM. LG. LINEAR SHAFT	MISUMI
24	1	U- FJN0-44-G0-375	COMPACT FLOATING JOINTS	MISUMI
25	2	WRBAA50-25-5	M50 x 25 x 6 THK. ADHESIVE RUBBER WASHER	MISUMI

REVISION HISTORY

REV	BY	DATE	DESCRIPTION
A	VK	2/27/2009	NEW DESIGN
B	VK	4/24/2009	NEW DESIGN
C	VK	4/29/2009	NEW DESIGN
D	VK	6/4/2009	WAS M8 x 45 LG. SHCS
E	VK	8/17/2009	NEW DESIGN
F1	VK	5/5/2010	ADDED TTA PART No.
F2	VK	5/6/2010	NEW NAME
G	VK	8/13/2010	ADDED VENDOR
H1	VK	10/5/2010	WAS 2.105
H2	VK	10/5/2010	WAS .125
H3	VK	10/5/2010	WAS .187

REF: 9902-24-800

trans tech

QUANTITY PER ASSY 1	DETAIL NAME CUP DRIVE SLIDE ASSY F2		
CAD FILE NO. H38-09-00	MAT'L FINISH NONE	HEAT TREAT NONE	
PROJ.	MATERIAL SEE PARTS LIST		
	CHECKED	SCALE 3:8	BY Vito	DATE 2/26/2009
	SIZE C	DRAWING NO. F1 9902-27-000	REV. H

ITW TRANS TECH PROPRIETARY

THIS DOCUMENT CONTAINS CONFIDENTIAL, PROPRIETARY INFORMATION THAT IS ITW TRANS TECH'S PROPERTY. DO NOT DISCLOSE, DEVELOPMATE FOR OTHERS EXEPT AS AUTHORIZED BY ITW TT.

TOLERANCE UNLESS OTHERWISE SPECIFIED:

XX	± .010	XXXX	± .0005
XXX	± .005	ANGLES	± .5°

FRACTIONS: ± 1/64" BREAK ALL CORNERS 1/64"

Parts List				
ITEM	QTY	PART NUMBER	DESCRIPTION	VENDOR
1	1	9902-28-001	PLATE - TABLE	
2	1	9902-28-002	SHAFT - PLATE TABLE MTG	
3	1	9902-28-003	PLATE - FACE TABLE SUPPORT	
4	1	9902-28-004	PLATE - CLAMP TABLE	
5	1	9902-28-005	30 MM. I.D. SHAFT COLLAR - ALTERATION	
6	1	6848K710	M10 HANDLE	McMASTER
7	6	91290A438	M8 x 35 LG. SHCS	MCMASTER
8	6	91290A446	M8 x 45 LG. SHCS	MCMASTER
9	1	91294A330	M10 x 25 LG. FHCS	MCMASTER

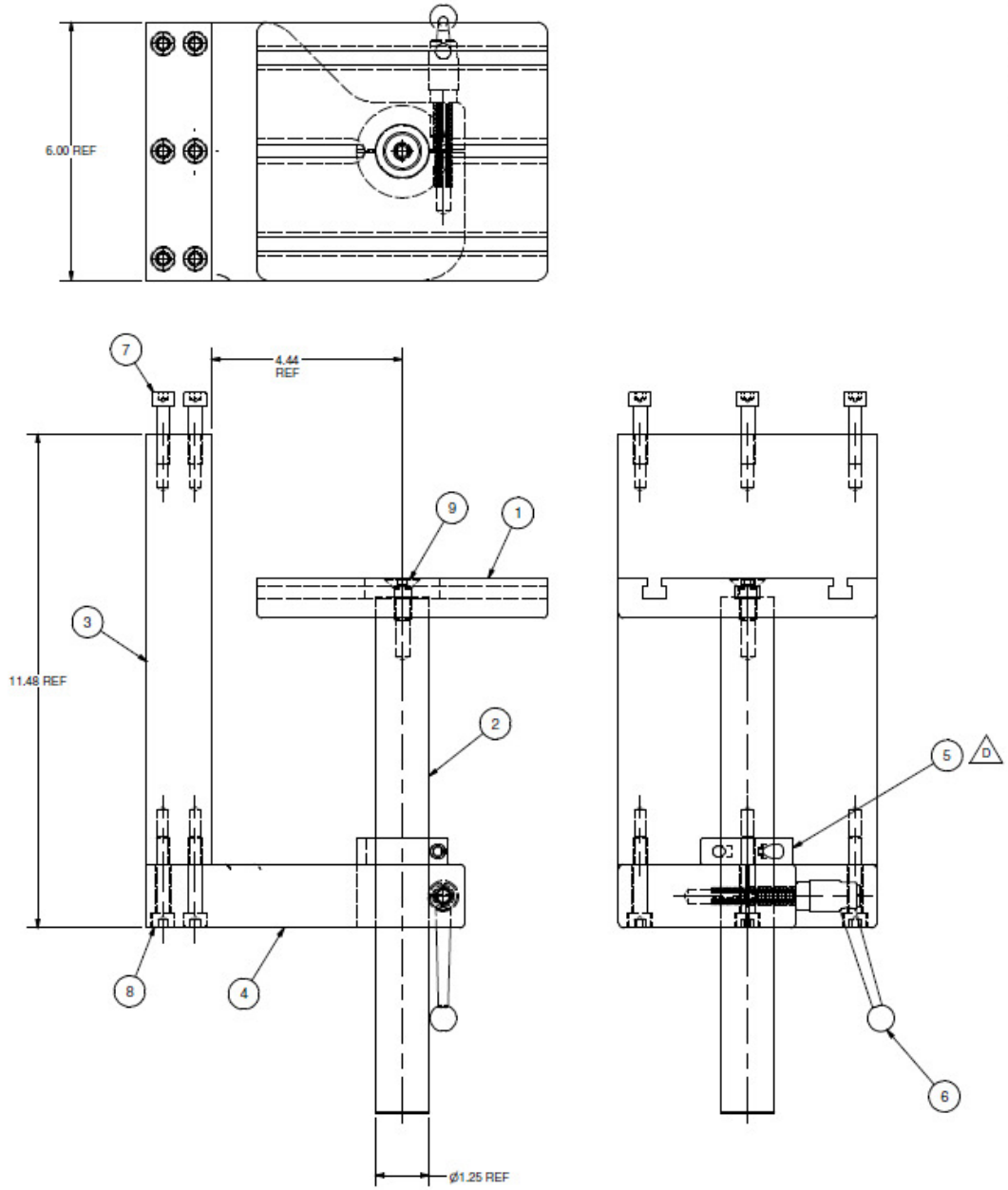

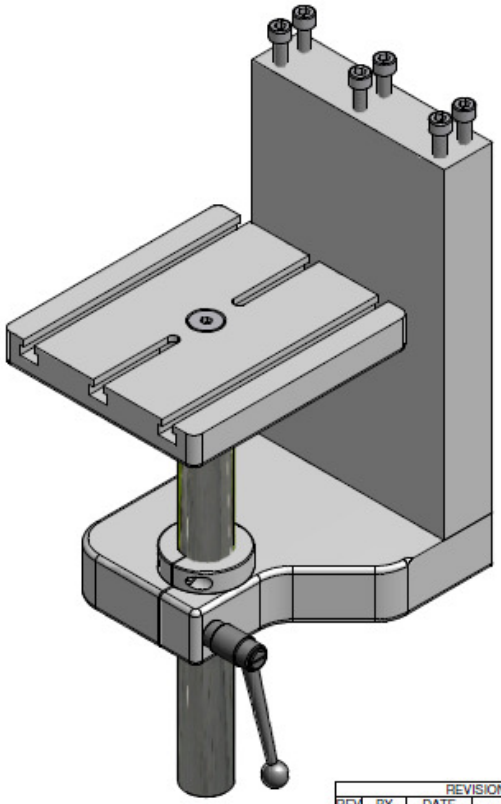

REVISION HISTORY			
REV	BY	DATE	DESCRIPTION
B1	VK	1/13/2009	WAS M10 x 35 LG. FHCS
B2	VK	1/13/2009	ADDED REV-A
B3	VK	1/13/2009	ADDED REV-A
B4	VK	1/13/2009	ADDED REV-C
C1	VK	2/23/2009	ADDED REV-D
D	VK	5/22/2009	NEW CLAMP COLLAR
E	VK	5/04/2010	ADDED TTA PART No.
F	VK	8/13/2010	ADDED VENDOR

REF: 9902-28-100
1-REQ'D

DETAIL NAME
PART SUPPORT ASSY, STANDARD

CAD FILE NO.
H38-10-00

MAT'L FINISH: NONE

HEAT TREAT: NONE

PROJ.

MATERIAL: SEE PARTS LIST

CHECKED

SCALE: 1:2

BY: Vito

DATE: 7/12/2008

SIZE: C

DRAWING NO.: 9902-28-000

REV.: F

ITW TRANS TECH
PROPRIETARY

THIS DOCUMENT CONTAINS CONFIDENTIAL, PROPRIETARY INFORMATION THAT IS ITW TRANSTECH'S PROPERTY. DO NOT DISCLOSE OR DUPLICATE FOR OTHERS EXCEPT AS AUTHORIZED BY ITW TT.

TOLERANCE UNLESS OTHERWISE SPECIFIED:
.XX ± .010 .XXXX ± .0005
.XXX ± .005 ANGLES ± .5°
FRACTIONS: ± 1/64" BREAK ALL CORNERS 1/64"

Parts List				
ITEM	QTY	PART NUMBER	DESCRIPTION	VENDOR
1	1	9902-29-001	PLATE - CLAMP CLICHE 130	
2	1	9902-29-002	CLAMP - CLICHE	
3	1	9902-29-003	VITO BITE	
4	3	91290A228	M5 x 12 LG. SHCS	MCMASTER
5	2	91290A446	M8 x 45 LG. SHCS	MCMASTER
6	1	91294A238	M6 x 16 FHCS	MCMASTER
7	5	98381A540	1/4 x 3/4 LG. DOWEL	MCMASTER
8	1	EHC-30068C	M5 HELICOIL x 18 MM. LG.	J&L INDUSTRIAL SUPPLY

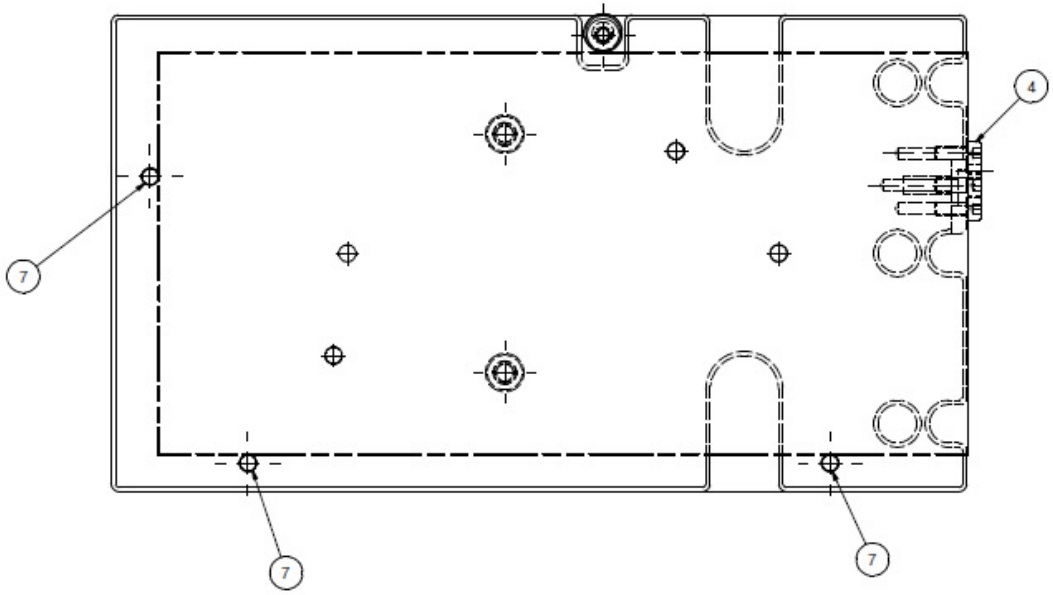

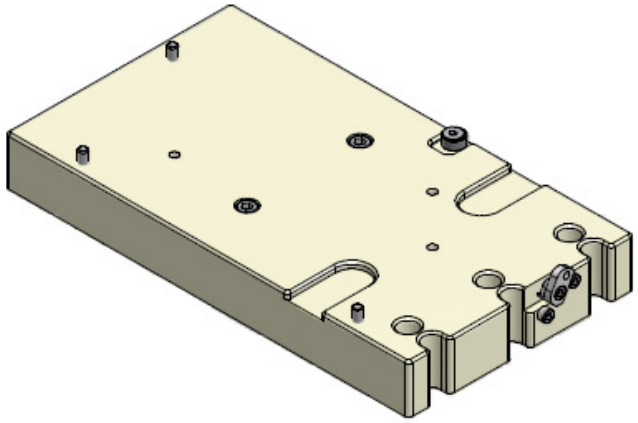

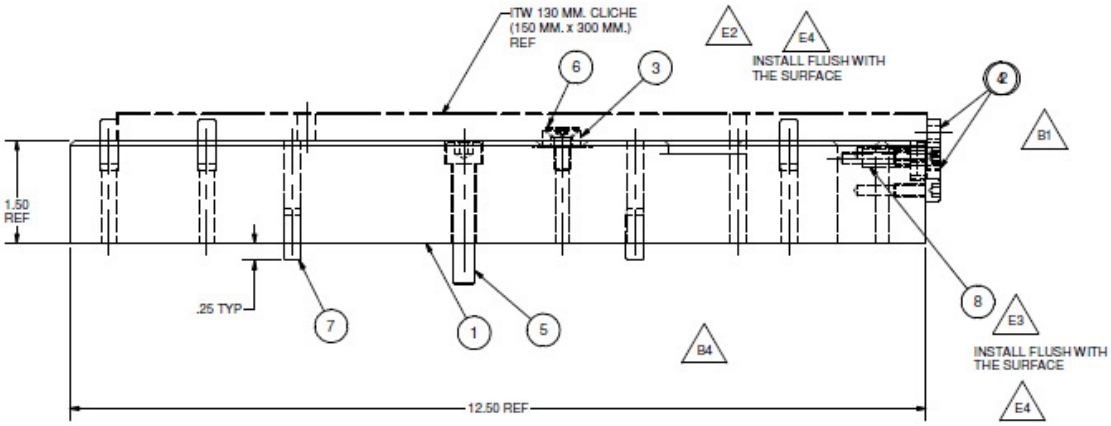

REVISION HISTORY			
REV	BY	DATE	DESCRIPTION
A1	VK	10/7/2008	NEW DESIGN
B1	VK	1/13/2009	WAS 9902-23-002
B2	VK	1/13/2009	WAS M5 x 16 LG. SHCS
B3	VK	1/13/2009	ADDED REV-C
B4	VK	1/14/2009	ADDED NEW SCREWS
C	VK	3/9/2009	WAS REV-C
D1	VK	4/24/2009	ADDED REV-E
D2	VK	4/27/2009	NEW ITEM #5
E1	VK	6/05/3009	ADDED REV-F
E2	VK	6/05/2009	WAS #EHC-30062A
E3	VK	6/05/2009	WAS #EHC-30054B
E4	VK	6/05/2009	ADDED NOTES
F1	VK	6/11/2009	ADDED REV-A
F2	VK	6/11/2009	ADDED REV-G
G	VK	5/06/2010	ADDED TTA PART No.
H	VK	8/12/2010	LATEST UPDATES

REF: 9902-23-500
1-REQ'D

CAD FILE NO. H38-08-00

PROJ.

DETAIL NAME: CLICHE SUPPORT - ITW - 130

MAT'L FINISH: NONE

HEAT TREAT: NONE

MATERIAL: SEE PARTS LIST

CHECKED

SCALE: 3:4

BY: Vito

DATE: 7/12/2008

SIZE: C

DRAWING NO.: 9902-29-000

REV.: H

ITW TRANS TECH
PROPRIETARY
THIS DOCUMENT CONTAINS CONFIDENTIAL, PROPRIETARY INFORMATION THAT IS ITW TRANS TECH'S PROPERTY. DO NOT DISCLOSE OR DUPLICATE FOR OTHERS EXEPT AS AUTHORIZED BY ITW TT.

TOLERANCE UNLESS OTHERWISE SPECIFIED:
.XX ±.010 .XXXX ±.0005
.XXX ±.005 ANGLES ±.5°
FRACTIONS: ±1/64" BREAK ALL CORNERS 1/64"

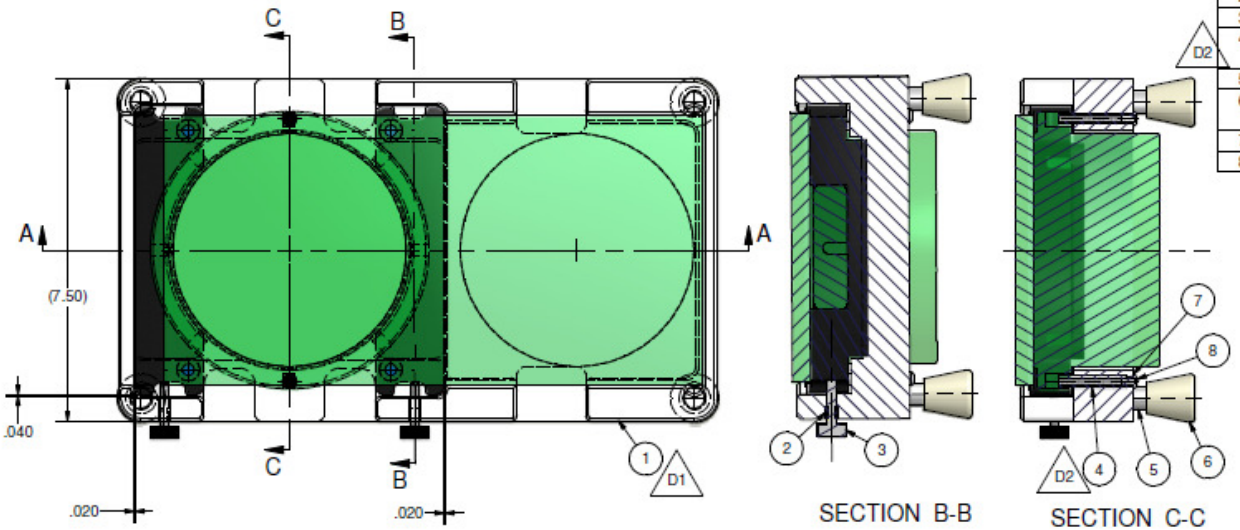

SECTION B-B

SECTION C-C

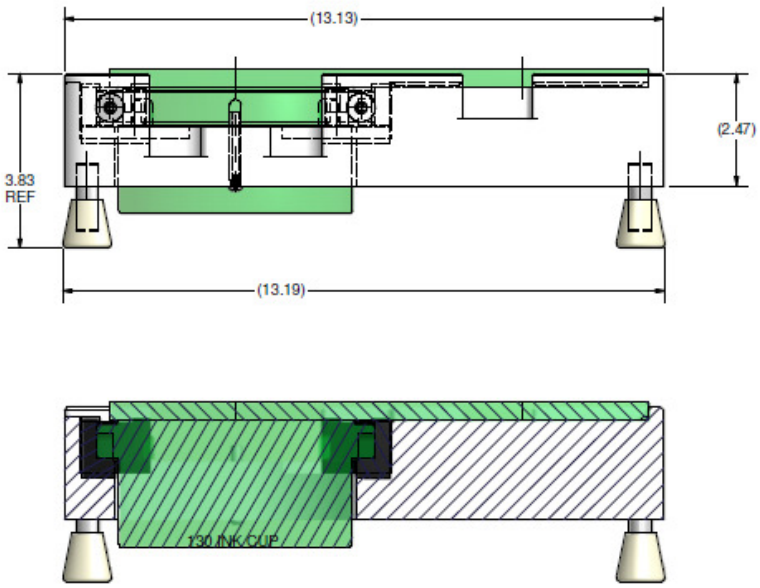

SECTION A-A

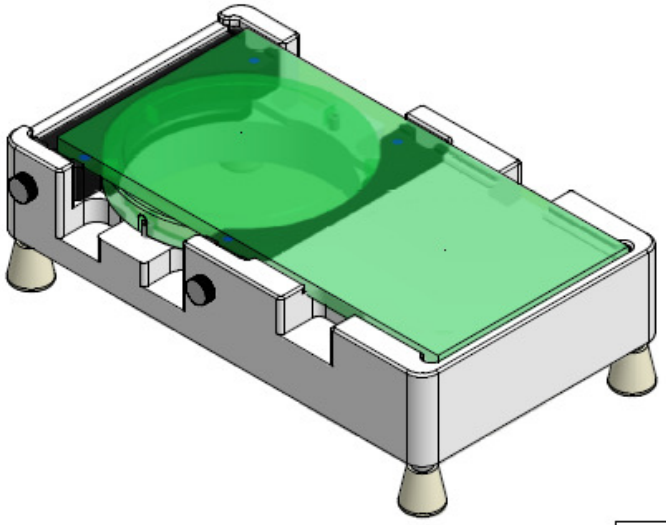

Parts List

ITEM	QTY	PART NUMBER	DESCRIPTION	VENDOR
1	1	H72-02-01	SETUP TABLE - 130	
2	2	92398A125	M5 THREADED INSERT	MCMASTER
3	2	96016A249	M5 THUMB SCREW	MCMASTER
4	2	97175A318	1/4 DIA. x 1-1/2 LG. PULL-OUT DWL PIN	MCMASTER
5	4	98381A716	.500 x 1.50 DOWEL PIN	MCMASTER
6	4	2517T81	CHAIR, CANE, AND CRUTCH TIPS, GRAY FOR 1/2 LEG O.D.	MCMASTER
7	2	90945A725	#8 FLAT WASHER (SS)	MCMASTER
8	2	92949A190	#8-32 x .25 BHCS (SS)	MCMASTER

REVISION HISTORY

REV	BY	DATE	DESCRIPTION
A	VK	3/21/2009	ADDED REV-C
B	VK	8/14/2010	ADDED TTA PART NUMBER
C	EH	8/18/2010	UPDATED BOM/PART NUMBER
D1	VK	8/26/2010	NEW REVISION
D2	VK	8/26/2008	WAS 97175A311

ITW TRANS TECH
PROPRIETARY
THIS DOCUMENT CONTAINS CONFIDENTIAL, PROPRIETARY INFORMATION THAT IS ITW TRANS TECH'S PROPERTY. DO NOT DISCLOSE OR DUPLICATE FOR OTHERS EXCEPT AS AUTHORIZED BY ITW TT.

TOLERANCE UNLESS OTHERWISE SPECIFIED:
.XX ± .010 .XXXX ± .0005
.XXX ± .005 ANGLES ± .5°
FRACTIONS: ± 1/64" BREAK ALL CORNERS 1/64"

trans tech

DETAIL NAME: SETUP TABLE ASSY 130

CAD FILE NO.: H72-02-00

PROJ.

MAT'L FINISH: NONE

HEAT TREAT: NONE

MATERIAL: SEE PARTS LIST

CHECKED

SCALE: 1:2

BY: Vito

DATE: 12/5/2008

SIZE: C

DRAWING NO.: 9902-30-000

REV.: D

Parts List				
ITEM	QTY	PART NUMBE	DESCRIPTION	VENDOR
1	1	H72-01-01	130 - CUP HOLDER	
2	2		1/2 DIA x 1/2 LG. MAGNET	

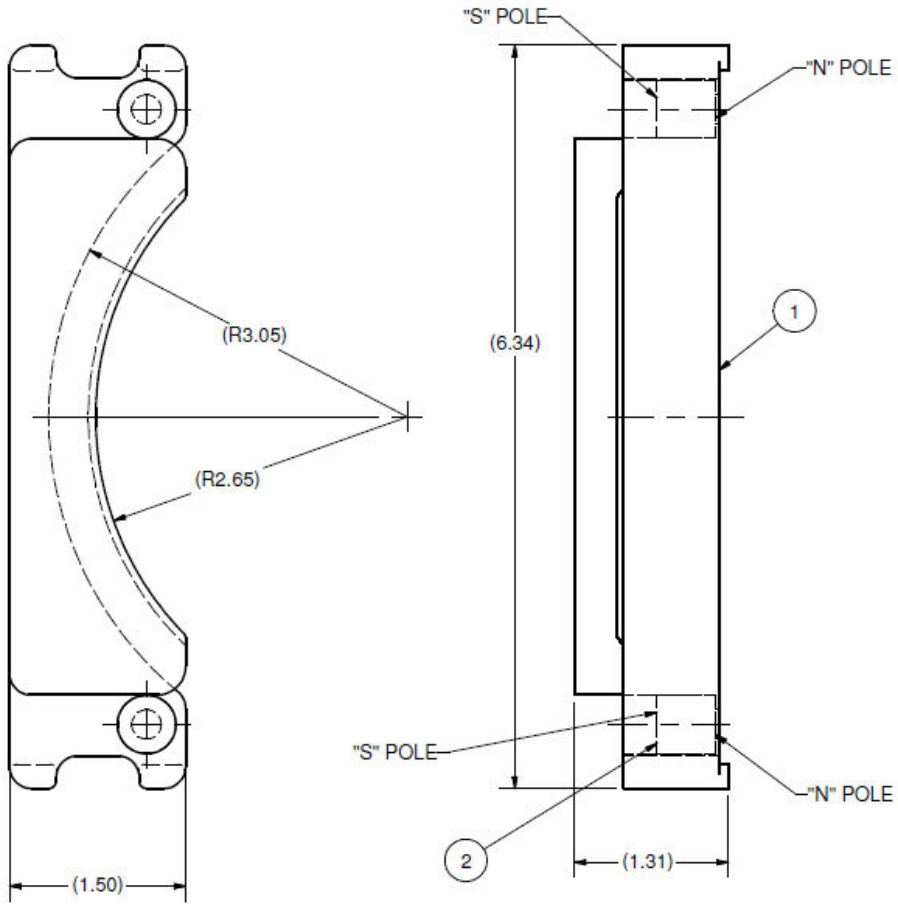

NOTE:
THE ORENTATION OF THE MAGNETS IS VERY IMPORTANT
SEE DRAWING FOR DETAILS

REVISION HISTORY			
REV	BY	DATE	DESCRIPTION
B	VK	1/9/2009	ADDED REV-B
C	VK	3/24/2009	ADDED REV-C
D	VK	8/14/2010	ADED TTA PART NYMBER

trans tech

DETAIL NAME: 130-CUP HOLDER ASSY

CAD FILE NO.: H72-01-00

MAT'L FINISH: NONE

HEAT TREAT: NONE

PROJ.

MATERIAL: SEE PARTS LIST

ITW TRANS TECH
PROPRIETARY

THIS DOCUMENT CONTAINS CONFIDENTIAL, PROPRIETARY INFORMATION THAT IS ITW TRANS TECH'S PROPERTY. DO NOT DISCLOSE OR DUBLICATE FOR OTHERS EXEPT AS AUTHORIZED BY ITW TT.

TOLERANCE UNLESS OTHERWISE SPECIFIED:
.XX ±.010 .XXXX ±.0005
.XXX ±.005 ANGLES ± .5°
FRACTIONS: ± 1/64" BREAK ALL CORNERS 1/64"

CHECKED	SCALE	BY	DATE
	1:1	Vito	12/4/2008

SIZE	DRAWING NO.	REV.
B	9902-30-002	D

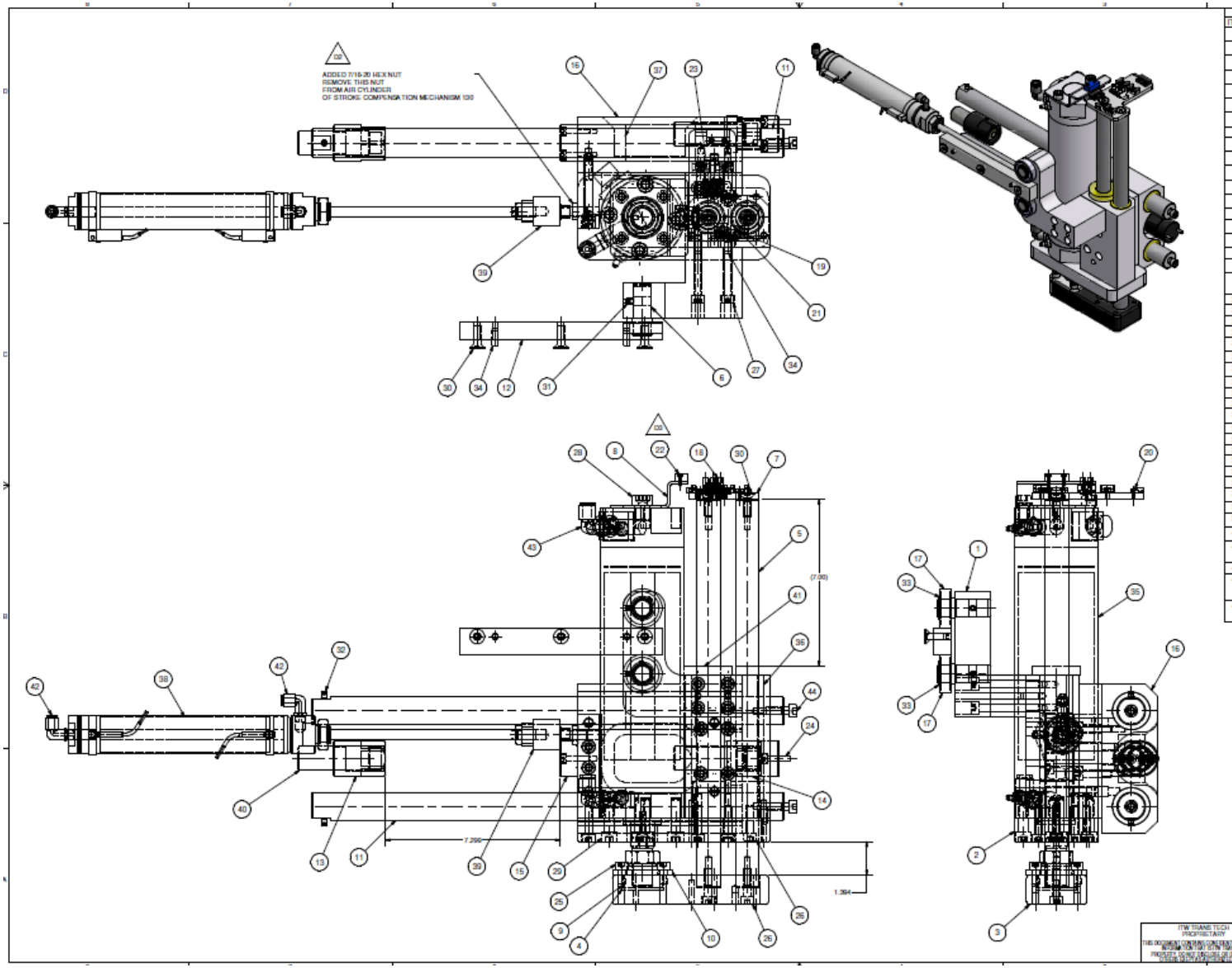

Parts List

ITEM	QTY	PART NUMBER	DESCRIPTION	VENDOR
1	1	9902-33-001	PLATE - PAD SUPPORT	
2	1	9902-33-002	PLATE - CYL MTG	
3	1	9902-33-003	BLOCK CUP DRIVER	
4	1	9902-33-004	SPACER - END CYLINDER	
5	2	9902-33-005	SHAFT - VERTICAL	
6	2	9902-33-006	SHAFT - PAD SUPPORT	
7	1	9902-33-007	PLATE - SENSORS MTG	
8	1	9902-33-008	BRACKET - SENSOR MAGNET MTG	
9	1	9902-33-009	ROD END CYLINDER	
10	1	9902-33-010	ROD COUPLER	
11	2	9902-33-011	SHAFT - HORIZONTAL	
12	1	9902-33-012	PLATE - GUIDE	
13	1	9902-33-013	NUT - SHOCK ABSORBER	
14	1	9902-33-014	NUT - SHORT - SHOCK ABSORBER	
15	2	9902-33-015	STOP - ROUND	
16	1	9902-22-000	PAD - CYLINDER ASSY	
17	2	6355K48	3/4 DIA x 1-5/8 O.D. x 7/16 THK BEARING	
18	1	7518K612	3 POS. TERMINAL BLOCK	MCMASTER
19	4	7566K13 7130K41	CABLE STRAP CABLE TIES	MCMASTER
20	4	91239A113	M3 x 8 LG. BHCS	MCMASTER
21	4	91239A140	M4 x 8 LG. BHCS	MCMASTER
22	2	91290A115	M3 x 10 LG. SHCS	MCMASTER
23	2	91290A106	M2.5 x 16 LG. SHCS	MCMASTER
24	4	91290A252	M5 x 25 LG. SHCS	MCMASTER
25	4	91290A418	M8 x 16 LG. SHCS	MCMASTER
26	7	91290A434	M8 x 30 LG. SHCS	MCMASTER
27	4	91290A458	M8 x 65 LG. SHCS	MCMASTER
28	2	91290A512	M10 x 16 LG. SHCS	MCMASTER
29	4	91290A526	M10 x 35 LG. SHCS	MCMASTER
30	5	91294A286	M8 x 25 LG. FHCS	MCMASTER
31	2	93245A127	M6 x 8 LG. SSS FL. PNT.	MCMASTER
32	2	93245A127	M6 x 8 LG. SSS FL. PNT	MCMASTER
33	2	97633A250	3/4 DIA. EXTERNAL RETAINING RING	MCMASTER
34	6	98381A540	1/4 x 3/4 LG. DWL PIN	MCMASTER
35	1	CBG1BA80-200-HN	80 MM DIA x 200 MM. STROKE AIR CYL.	SMC
36	4	KH 2540 PP	25 MM. I.D. LINEAR BALL BEARINGS	MOTION IND.
37	4	KH 3050 PP	30 MM. I.D. LINEAR BALL BRG.	MOTION IND.
38	1	NCMZS-GAN002-0750	1.5" BORE , 7.5" STR. CYL 8" ROD	SMC
39	1	NJ07	ROD COUPLER	SMC
40	2	NRBC100-060	SHOCK ABSORBERS	SMC
41	1	U-URWM 1.00 - D 2.00 - T.37'5	URETHANE WASHER	MISUMI
42	2	KQ2L07-34	MALE ELBOW	SMC
43	2	KQ2L13-U03 1/2"TUBE x 3/8"	UNI-THREAD ELBOW	SMC
44	2	91290A432	M8 X 25 LG. SHCS	MCMASTER

REVISION HISTORY

REV	BY	DATE	DESCRIPTION
A1	VK	2/27/2009	NEW DESIGN
B	VK	4/29/2009	ADDED REV. C
D1	VK	6/15/2009	WAS KQ2L13-36S
D2	VK	6/15/2009	ADDED NOTE
D3	VK	6/15/2009	WASMD Ex 10 LG. SHCS
E	VK	5/05/2010	ADDED TTA PART No.
F	VK	8/13/2010	ADDED VENDOR

trans tech

REF: 9902-22-000
1-REQ'D

DETAIL NAME: PAD - RAM SLIDE ASSY

CAD FILE NO.: HS8-03-00

MAT'L FINISH: NONE | HEAT TREAT: NONE

PROJ:

MATERIAL: SEE PARTS LIST

CHECKED | SCALE: 1:2 | BY: VBo | DATE: 2/27/2009

SIZE: D | DRAWING NO.: 9902-33-000 | REV.: F

ITW TRANS TECH PROPRIETARY

THIS DOCUMENT CONTAINS CONFIDENTIAL, PROPRIETARY INFORMATION OF ITW TRANS TECH'S PROPERTY. IS NOT UNDER ORIGINAL FOR PUBLIC DISTRIBUTION OR REPRODUCTION.

TOLERANCES UNLESS OTHERWISE SPECIFIED:
.XX ± .010 .XXX ± .005
.XXX ± .005 ANGLES ± 1°
FRACTIONS ± 1/64" BREAK ALL CORNERS 1/64"

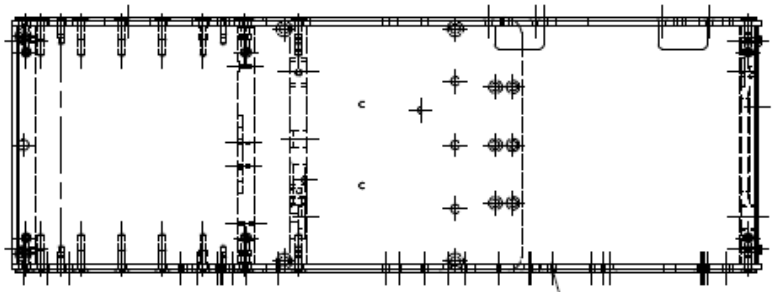

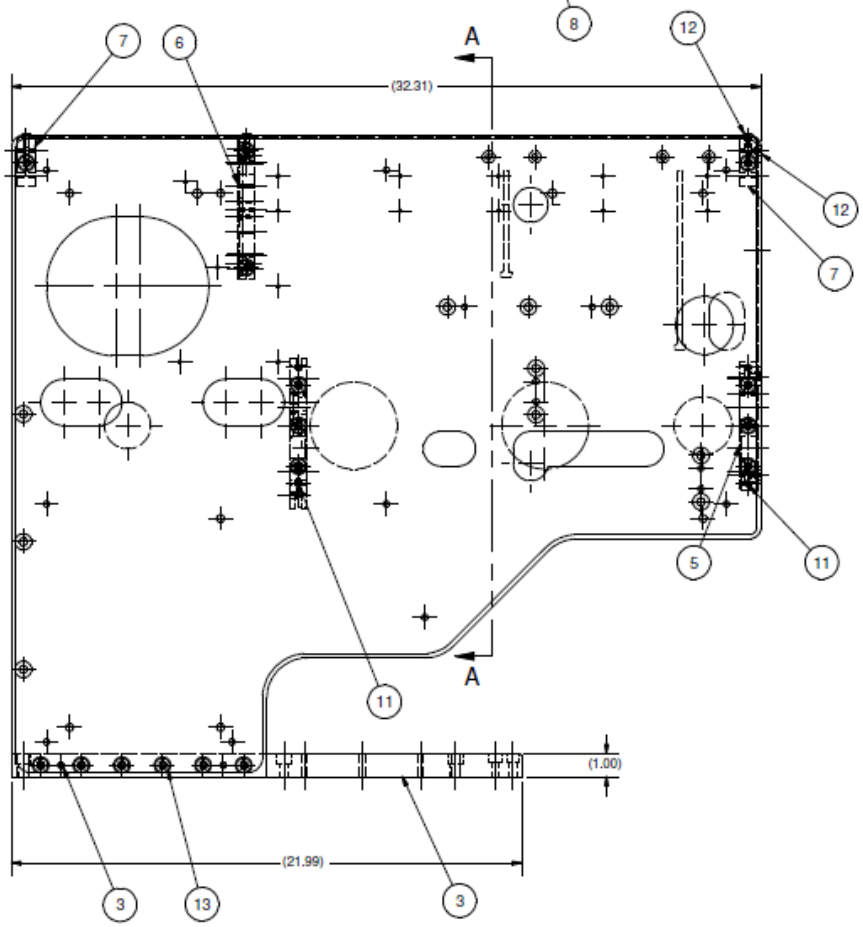

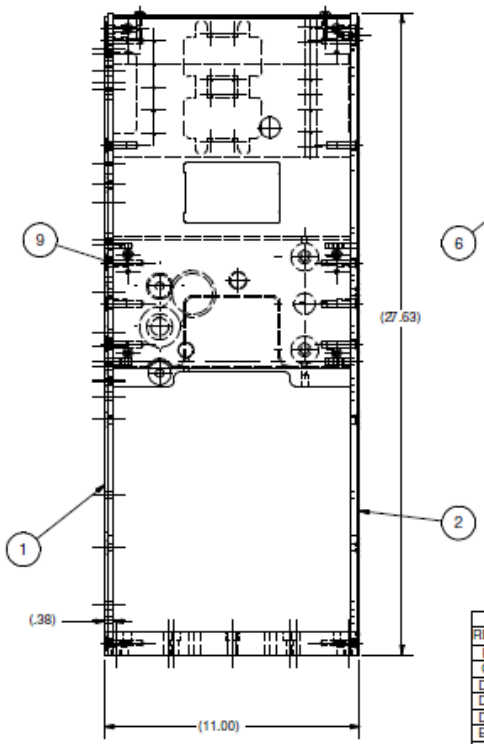

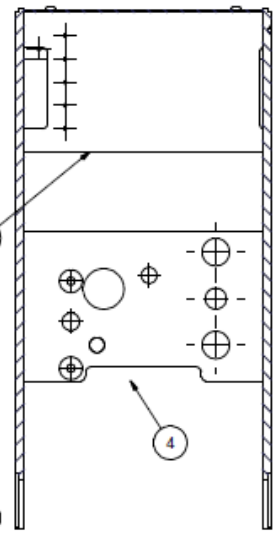

SECTION A-A
SCALE 1 / 4

Parts List

ITEM	QTY	PART NUMBER	DESCRIPTION	VENDOR
1	1	9902-40-001	PLATE - MAIN LEFT SIDE	
2	1	9902-40-002	PLATE - MAIN RIGHT SIDE	
3	1	9902-40-003	PLATE - BASE	
4	1	9902-40-004	PLATE - SPACER CENTER	
5	1	9902-40-005	PLATE - SPACER LOWER FRONT	
6	1	9902-40-006	PLATE - UPPER SUPPORT MIDDLE	
7	2	9902-40-007	BRACKET - UPPER SUPPORT	
8	1	9902-40-008	PLATE - COVER TOP	
9	1	9902-40-009	PLATE - DISPLAY MTG	
11	12	98381A540	1/4 x 3/4 LG. HRD DOWEL PIN	MCMASTER
12	12	91239A318	M6 x 12 LG. BHCS	MCMASTER
13	32	91294A286	M8 x 25 LG. FHCS	MCMASTER

REVISION HISTORY

REV	BY	DATE	DESCRIPTION
B	VK	1/13/2009	NEW DESIGN
C	VK	2/25/2009	NEW DESIGN
D1	VK	4/24/2009	ADDED REV-E
D2	VK	4/24/2009	ADDED REV-F
D3	VK	4/24/2009	ADDED REV-C
E1	VK	6/15/2009	ADDED REV-F
E2	VK	6/15/2009	ADDED REV-F
F	VK	5/03/2010	ADDED TTA PART No.
G	VK	8/13/2010	ADDED VEVDOR

REF: 9902-20-000
1-REQ'D

DETAIL NAME: FRAME ASSY

CAD FILE NO.: H38-02-00

MAT'L FINISH: NONE

HEAT TREAT: NONE

PROJ.

MATERIAL: SEE PARTS LIST

CHECKED

SCALE: 1:4

BY: Vito

DATE: 7/12/2008

SIZE: C

DRAWING NO.: 9902-40-000

REV.: G

ITW TRANS TECH
PROPRIETARY
THIS DOCUMENT CONTAINS CONFIDENTIAL, PROPRIETARY INFORMATION THAT IS ITW TRANS TECH'S PROPERTY. DO NOT DISCLOSE OR REPRODUCE FOR OTHERS EXCEPT AS AUTHORIZED BY ITW TT.

TOLERANCE UNLESS OTHERWISE SPECIFIED:
.XX ± .010 .XXXX ± .0005
.XXX ± .005 ANGLES ± .5°
FRACTIONS: ± 1/64" BREAK ALL CORNERS 1/64"

Parts List			
ITEM	QTY	PART NUMBE	DESCRIPTION
1	1	9902-80-001	BRACKET - CONTROL MTG
2	2	S-M3-2-Z1	M3 PEM
3	3	S-M4-2-Z1	M4 PEM

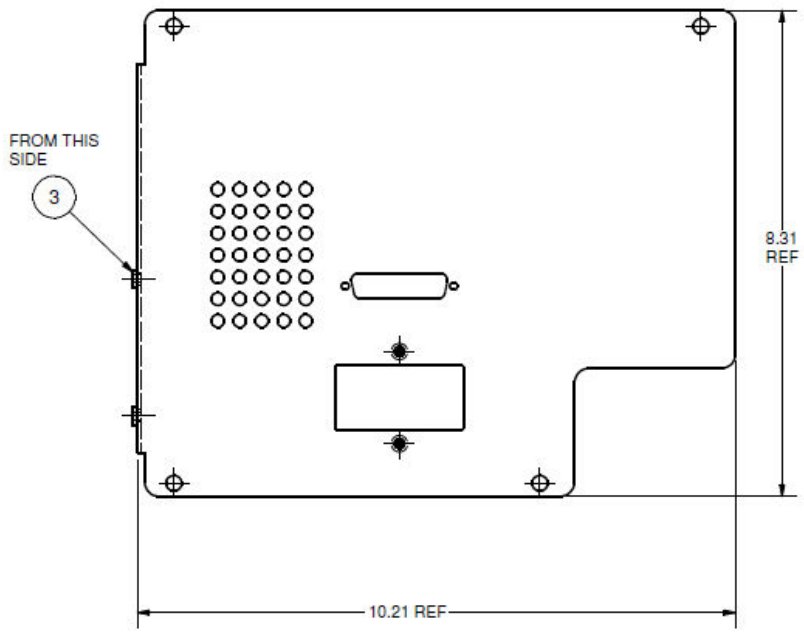

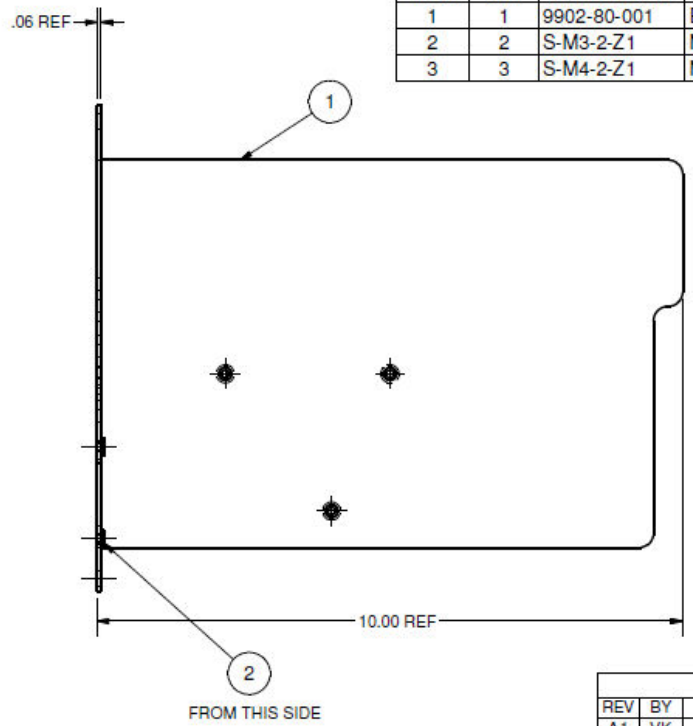

REVISION HISTORY			
REV	BY	DATE	DESCRIPTION
A1	VK	9/22/2008	ADDED REV-A
B1	VK	1/13/2009	ADDED REV-B
C	VK	12/14/2009	NEW BRACKET
D	VK	5/06/2010	ADDED TTA PART No.

REF: 9902-81-000
1-REQ'D

DETAIL NAME
BRACKET - CONTROL MTG ASSY

CAD FILE NO.
H38-13-00

MAT'L FINISH
NONE

HEAT TREAT
NONE

PROJ.

MATERIAL
SEE PARTS LIST

ITW TRANS TECH
PROPRIETARY

THIS DOCUMENT CONTAINS CONFIDENTIAL, PROPRIETARY INFORMATION THAT IS ITW TRANS TECH'S PROPERTY. DO NOT DISCLOSE OR DUPLICATE FOR OTHERS EXEPT AS AUTHORIZED BY ITW TT.

TOLERANCE UNLESS OTHERWISE SPECIFIED:
.XX ± .010 .XXXX ± .0005
.XXX ± .005 ANGLES ± .5°
FRACTIONS: ± 1/64" BREAK ALL CORNERS 1/64"

CHECKED

SCALE 1:4

BY Vito

DATE 7/12/2008

SIZE B

DRAWING NO. D 9902-80-000

REV. D

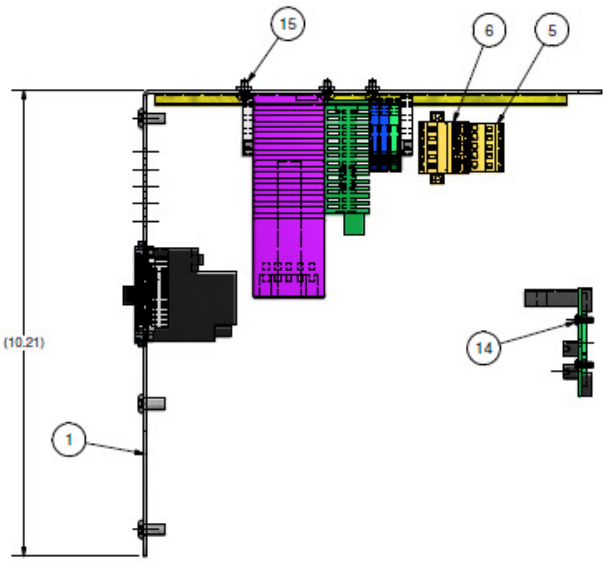

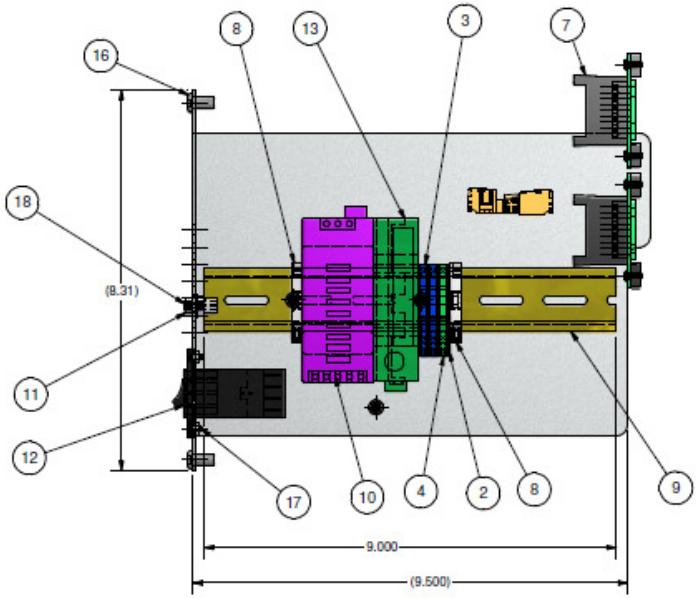

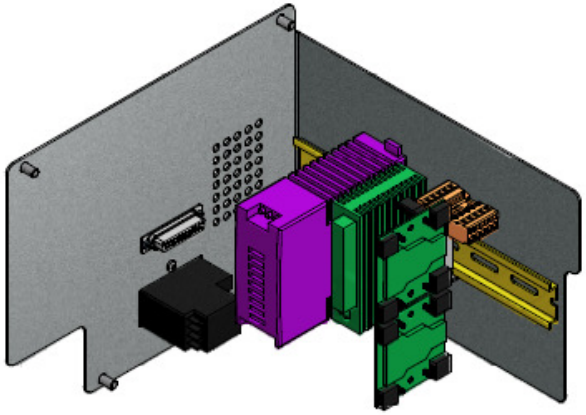

Parts List

ITEM	QTY	PART NUMBER	DESCRIPTION	VENDOR
1	1	9902-80-000 I	BRACKET - CONTROL MTG ASSY	
2	1	2002-6391	END PLATE	WAGO
3	2	2002-6404	TERMINAL BLOCK (BLUE)	WAGO
4	1	2002-6407	TERMINAL BLOCK (GREEN)	WAGO
5	1	231-103/102-000	3 PIN FEMALE CONNECTOR	WAGO
6	1	231-609	9 PIN MALE CONNECTOR	WAGO
7	2	51210533	BREAKOUT BOARD	WAGO
8	2	249-116	END ANCHOR	WAGO
9	1	IBOC-OMEGA-3F	35 MM x 7.5 MM X 8 LG. DIN RAIL	STANDARD
10	1	728754	POWER SUPPLY 24 VDC, 2.5 A.	STANDARD
11	1	AFL25B-ND	CONN D-SUB RECEPT 25 POS 30 GOLD	DIGIKEY
12	1	CCM1384-ND	POWER INLET MODULE	DIGIKEY
13	1	FPO-C32T-A	32 IN AND OUT TRANSFER MODULE	PANASONIC
14	8	91239A113	M3 x 0.5 x 8 mm BHCS	MCMASTER
15	3	91239A140	M4 x 8 LG. BHCS	McMASTER
16	4	91239A318	M6 x 12 LG. BHCS	McMASTER
17	2	91294A128	M3 x 8 MM. LG. FHCS BLACK OXIDE	MCMASTER
18	2	251089	#4-40, 3/16 LG. STANDPFF	LA

G

HARDWARE REQUIRED BUT NOT SHOWN

QTY	PART NUMBER	DESCRIPTION	VENDOR
5'	0027427	24 AWG, 4 COND. HI-FLEX CABLE	LAPP
3'	323017	18 AWG, 4 COND. CABLE BLK., NO GROUND	CABLEMASTER
2'	323002	18 AWG, GRN W/ YELLOW STRIPE WIRE	CABLEMASTER
1'	323011	18 AWG, RED WIRE	CABLEMASTER
1'	323012	18 AWG, WHITE WIRE	CABLEMASTER
5'	MC16M	16 COND. MULTICOLOR RIBBON CABLE	DIGIKEY
6'	MC10M	10 COND. MULTICOLOR RIBBON CABLE	DIGIKEY
6	CKC10S-ND	10 PIN CONNECTOR	DIGIKEY
2	7113K452	RING TERMINAL 22-18 AWG #10 STUD	MCMASTER
1		24V SNAP IN LABELS	STANDARD
1		OV SNAP IN LABELS	STANDARD
.03	LAT-15-361-5	LASER ID TAGS	STANDARD
30	V3AE0038	INSULATED FERRULES FOR 20AWG, WHITE	TSR
30	V3AE0041	INSULATED FERRULES FOR 18AWG, GREY	TSR
30	7130K14	8-1/2" CABLE TIE	MCMASTER
4	7566K29	CABLE TIE MOUNT	MCMASTER
1	7566K25	CABLE TIE MOUNT	MCMASTER
1	AFC1500-US	CABLE	PANASONIC
1	7856K351	HEAT SHRINK	MCMASTER
3	6614K22	CABLE TIE WHITE	MCMASTER
1		GND SNAP LABEL	STANDARD
1	7566K13	TIE MOUNT (E-STOP)	MCMASTER
1	7243K13	FEMALE QUICK DISCONNECT	MCMASTER
1	7243K12	MALE QUICK DISCONNECT	MCMASTER

REVISION HISTORY

REV	BY	DATE	DESCRIPTION
A1	VK	8/27/2008	ADDED REV-A
A2	VK	9/23/2008	ADDED NEW ITEMS
B1	VK	1/13/2009	WAS REV-A
C	VK	2/02/2009	NEW DESIGN
D	VK	5/06/2010	ADDED TTA PART No.
E	VK	8/13/2010	ADDED VENDOR
F	VK	10/5/2010	LATEST UPDATES
G	EH	8/30/2011	CHANGED WIRE #
I	VK	3/13/2012	WAS 9902-81-000

REF: 9902-80-000
1 REQ'D

DETAIL NAME: ELECTRICAL ASSY

CAD FILE NO.: H38-06-00

MAT'L FINISH: NONE

HEAT TREAT: NONE

PROJ.

MATERIAL: SEE PARTS LIST

CHECKED

SCALE: 1:2

BY: Vito

DATE: 7/12/2008

SIZE: C

DRAWING NO.: 9902-81-000

REV.: I

ITW TRANS TECH PROPRIETARY

THIS DOCUMENT CONTAINS CONFIDENTIAL PROPRIETARY INFORMATION OF ITW TRANS TECH'S PROPERTY. DO NOT DISCLOSE OR DUPLICATE FOR OTHERS EXCEPT AS AUTHORIZED BY ITW TT.

TOLERANCE UNLESS OTHERWISE SPECIFIED:
.XX ± .010 .XXXX ± .0005
.XXX ± .005 ANGLES ± .5°
FRACTIONS: ± 1/64" BREAK ALL CORNERS 1/64"

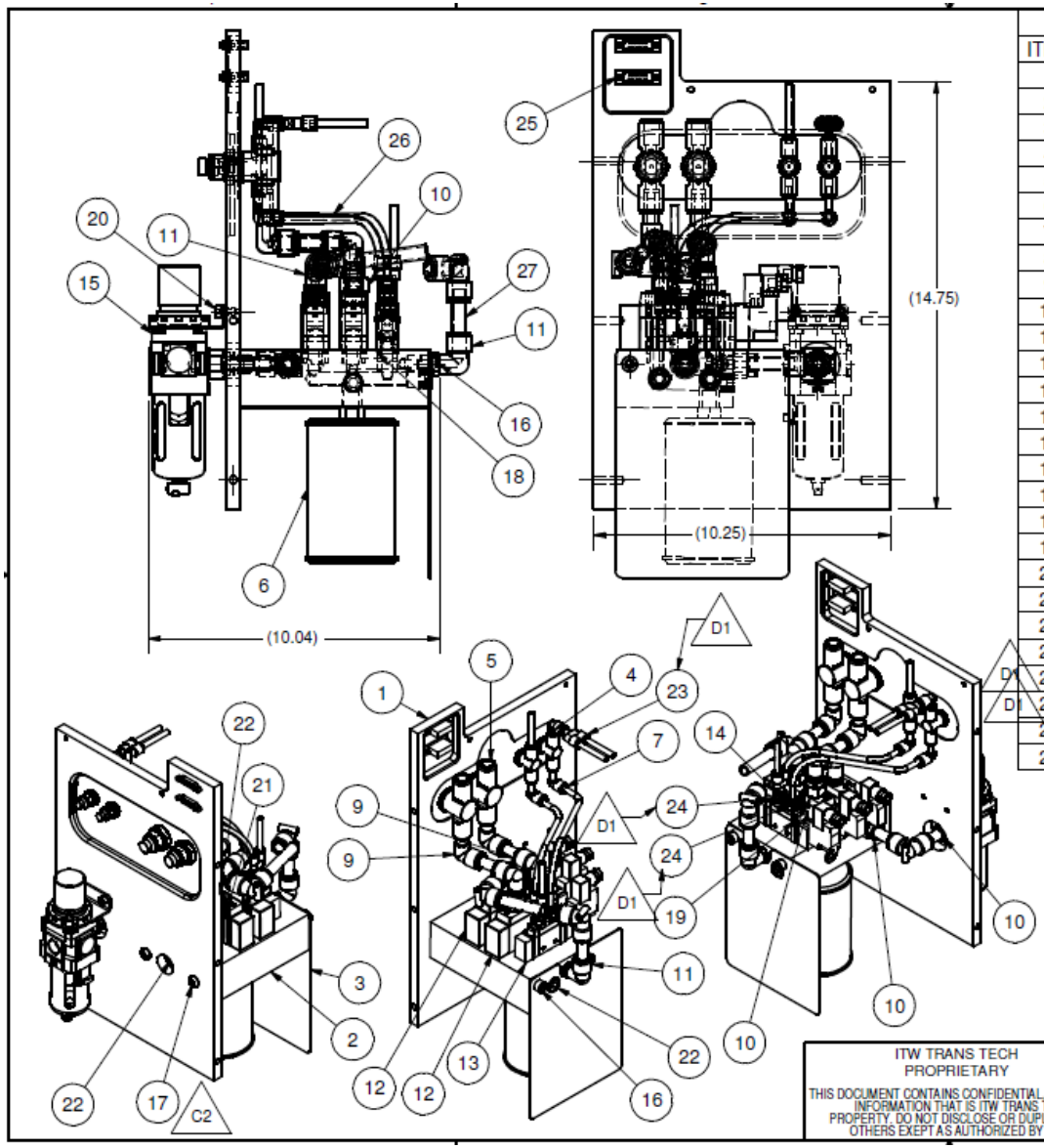

Parts List

ITEM	QTY	PART NUMBER	DESCRIPTION	VENDOR	NOTES
1	1	9902-91-001	PLATE - BASE PNEUMATIC		
2	1	9902-91-002	PLATE - VALVES MTG		
3	1	9902-91-003	COVER - MUFFLER		
4	2	AS 2051F-07-3	SPEED CONTROLLER		REF
5	2	AS4001F-13-3	SPEED CONTROLLER		REF
6	1	M050111005	1/2 NPT AUTOMUFFLER		017049
7	3	KQ2L07-99	1/4-1/4 PLUG IN REDUCER ELBOW		REF
8	3	KQ2L13-00	1/2" TUBE UNION ELBOW	SMC	
9	4	KQ2L13-99	1/2-1/2 PLUG IN REDUCER ELBOW		REF
10	4	KQ2H13-36S	3/8 NPT -1/2 TUBE MALE CONNECTOR		REF
11	2	KQ2L13-36S	3/8 NPT - 1/2 TUBE MALE ELBOW		REF
12	2	SY9120-5DZ-03T	VALVE		REF
13	1	SY7120-5DZ-02T	VALVE		REF
14	2	KQ2S07-35S	1/4 NPT x 1/4 TUBE MALE CONNECTOR		REF
15	1	AW30K-N03BE-Z	FILTER REGULATOR		REF
16	2	91290A416	M8 x 12 LG. SHCS	MCMASTER	
17	2	91239A427	M8 x 25 LG. BHCS	MCMASTER	
18	3	9452K185	#206 O-RING	MCMASTER	
19	2	91290A182	M4 x 35 LG. SHCS	MCMASTER	
20	2	91290A318	M6 x 12 LG. SHCS	MCMASTER	
21	6	91290A136	M3 X 40 LG. SHCS	MCMASTER	
22	5	9151K83	3/8 NPT BRASS PLUG	MCMASTER	
23	2	KJU07-99	1/4 O.D. PLUG-IN "Y"		REF
24	2	KQ2S07-35S	S TYPE HEX S. H. MALE CONNECTOR		REF
25	4	92710A207	STANDOFF	MCMASTER	
26	10ft	TIUB07B-33	1/4" TUBING - BLACK	SMC	
27	20ft	TIUB13B-33	1/2" TUBING - BLACK	SMC	

REVISION HISTORY

REV	BY	DATE	DESCRIPTION
F	VK	8/13/2010	ADDED VENDOR
G	EH	8/30/2011	ADDING TUBING INFORMATION

REF: 9902-90-000
1-REQ'D

CAD FILE NO. H38-07-00

PROJ.

DETAIL NAME: PNEUMATIC ASSY

MAT'L FINISH: NONE

HEAT TREAT: NONE

MATERIAL: SEE PARTS LIST

CHECKED

SCALE: 1:4

BY: Vito

DATE: 7/12/2008

SIZE: B

DRAWING NO.: E 9902-91-000

REV.: G

ITW TRANS TECH
PROPRIETARY

THIS DOCUMENT CONTAINS CONFIDENTIAL, PROPRIETARY INFORMATION THAT IS ITW TRANS TECH'S PROPERTY. DO NOT DISCLOSE OR DUPLICATE FOR OTHERS EXEPT AS AUTHORIZED BY ITW TT.

TOLERANCE UNLESS OTHERWISE SPECIFIED:

.XX ± .010 .XXXX ± .0005

.XXX ± .005 ANGLES ± .5°

FRACTIONS: ± 1/64" BREAK ALL CORNERS 1/64"