TRANSTECH

INDEX

AERO 60/90

Release 2.0

Operator's Manual

Trusted Partner for Your Product Decorating Needs

Trans Tech 475 North Gary Avenue, Carol Stream, IL 60188
Tel +1 (630) 752 4000 **Fax** +1 (630) 752 4467
Email sales@itwtranstech.com

www.itwtranstech.com www.itwids.com

A MEMBER OF IDS | A Division of ITW

THIS PAGE LEFT BLANK

Contents

1.1. Safety

1.1.1. Symbols and their Interpretations

WARNING Neglecting a safety instruction identified with the WARNING symbol may lead to personal injury.

CAUTION Neglecting a safety instruction identified with the CAUTION symbol may lead to property damage.

POINTER It is strongly recommended to observe instructions identified with a POINTER symbol.

1.1.2. Liability

- In no event will ***ITW TRANS TECH*** be responsible or liable for indirect or consequential damages resulting from the use of this equipment.
- The information contained in this manual is subject to change due to improvements in design.
- Though this document has been checked for inaccuracies, ***ITW TRANS TECH*** does not assume responsibility for any errors contained herein.
- This manual is provided as an aid when operating the Aero 60/90 pad printing machine. Prior to operation, it is strongly advised that the user be thoroughly familiar with the Aero 60/90 operating manual.
- ***ITW TRANS TECH*** is not responsible or liable for any disadvantage occurred for not following the operating instructions.

All operators must be sufficiently trained.

1.1.3. Warnings and Cautions

- Switch off main switch prior to connecting/disconnecting power.
- Disconnect power prior to opening the electrical enclosure.

Switch the MAIN DISCONNECT off and disconnect the power cord prior to working on the electrical system.

1.1.4. Application Restrictions

Any use other than described in this manual may cause damage to the equipment, personal injury or property damage.

1.2. Installation Instructions

1.2.1. Selecting the location

Choose a well ventilated area away from direct sunlight to install your pad printing machine. The ideal conditions for the inks used in pad printing are approximately 20° C (68° F) and 40 - 60 % humidity.
Make sure the machine is positioned away from walls and other obstructions and placed on a flat surface. The guards, operating panel and other machine openings must be accessible. Ensure adequate area for setup tooling and for storage of parts before and after printing.

1.2.2. Connection to power

1.2.3 Connecting to Air Supply

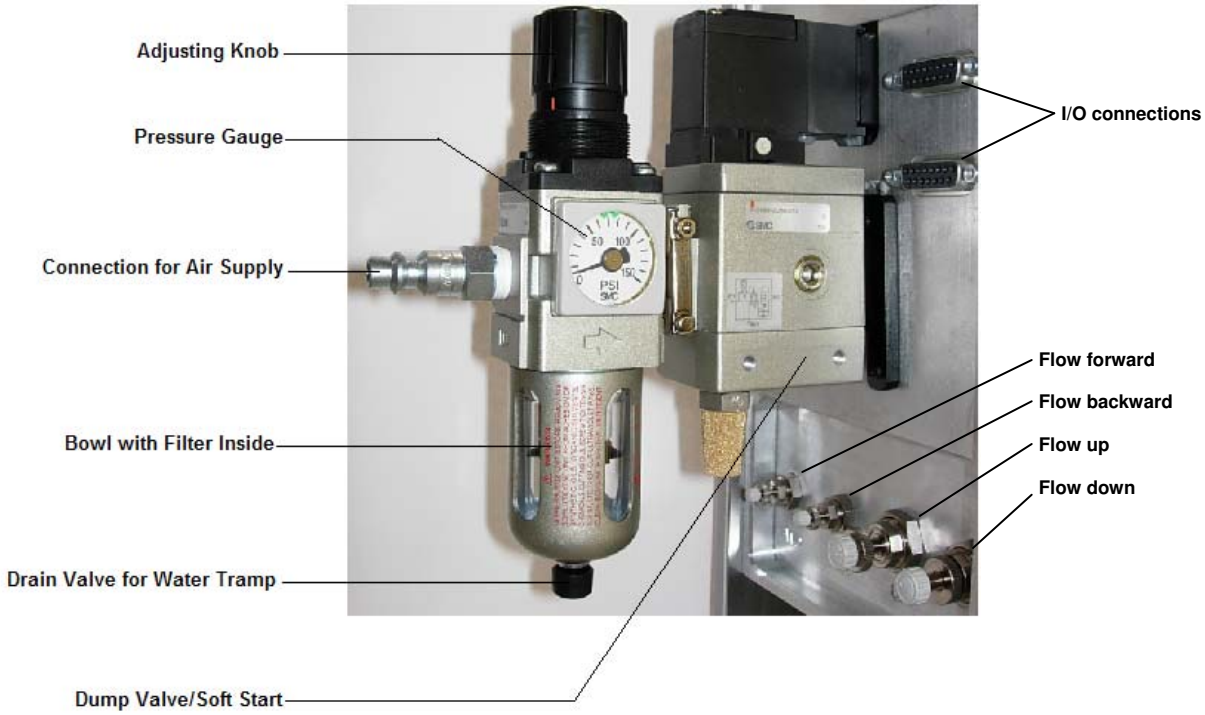

The machine requires clean, dry air. Minimum requirement:
- 6 bar (85 psi)
- 5 cfm

Air connection is to quick disconnect adapter (included) or to ¼ NPT female thread.

1.2.4 Setting Pressure Regulator

Adjust system pressure to 6 bar (85 psi) by lifting the adjusting knob to unlock, then turning the knob clockwise to increase the pressure or counterclockwise to decrease the pressure. Push down on the adjusting knob to lock the regulator after making adjustments.

1.2.5 Flow Controls

The **Flow Controls** are used to adjust the speed of the pad movement.

1.2.6 Mounting the Machine

Using the holes marked “A” in the following drawing, Install four (4) M6 x 20 S.H.C.S and tighten to 7 ft-lbs of torque. If preferred the machine can also be mounted form beneath using (4) M8-1.25 metric fasteners. Torque M8-1.25 fasteners to 17 ft-lbs.

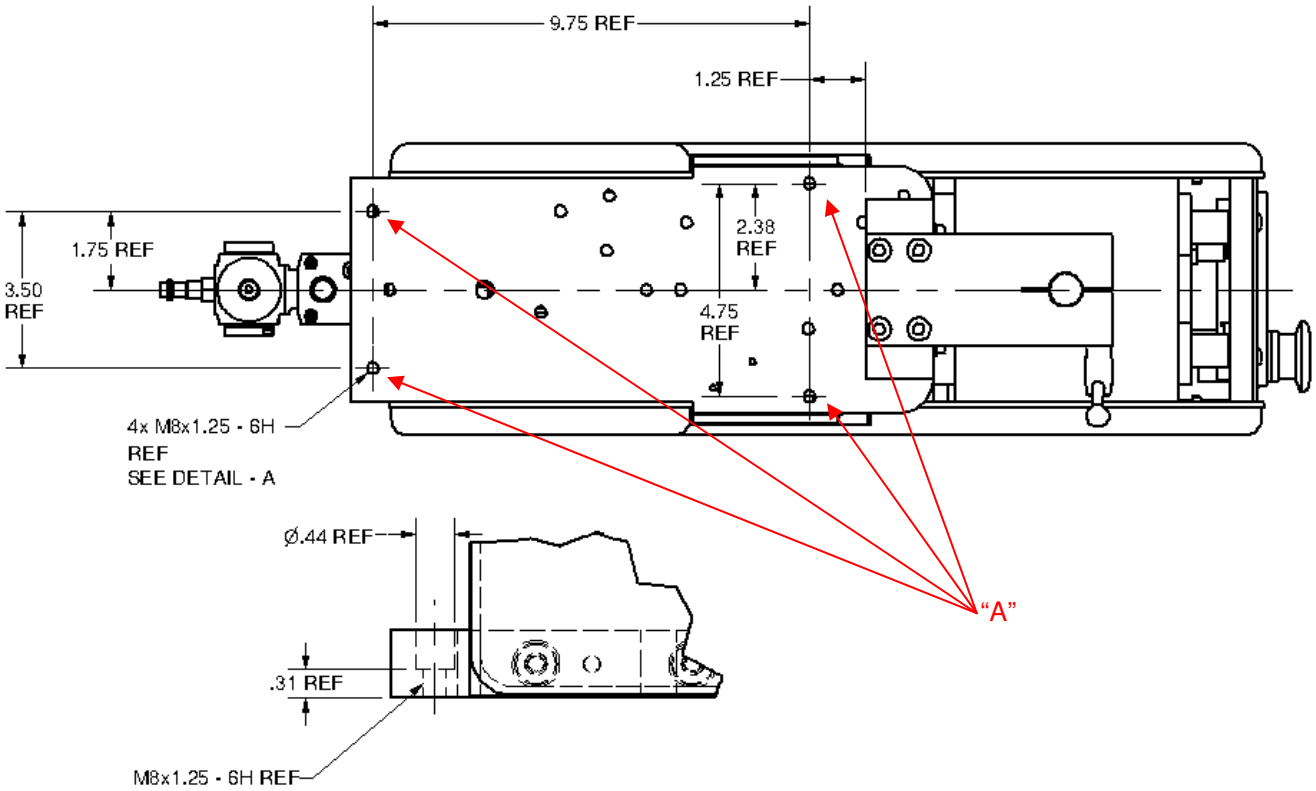

1.3. Printer Operation

1.3.1. Description of Ink Cup Tooling

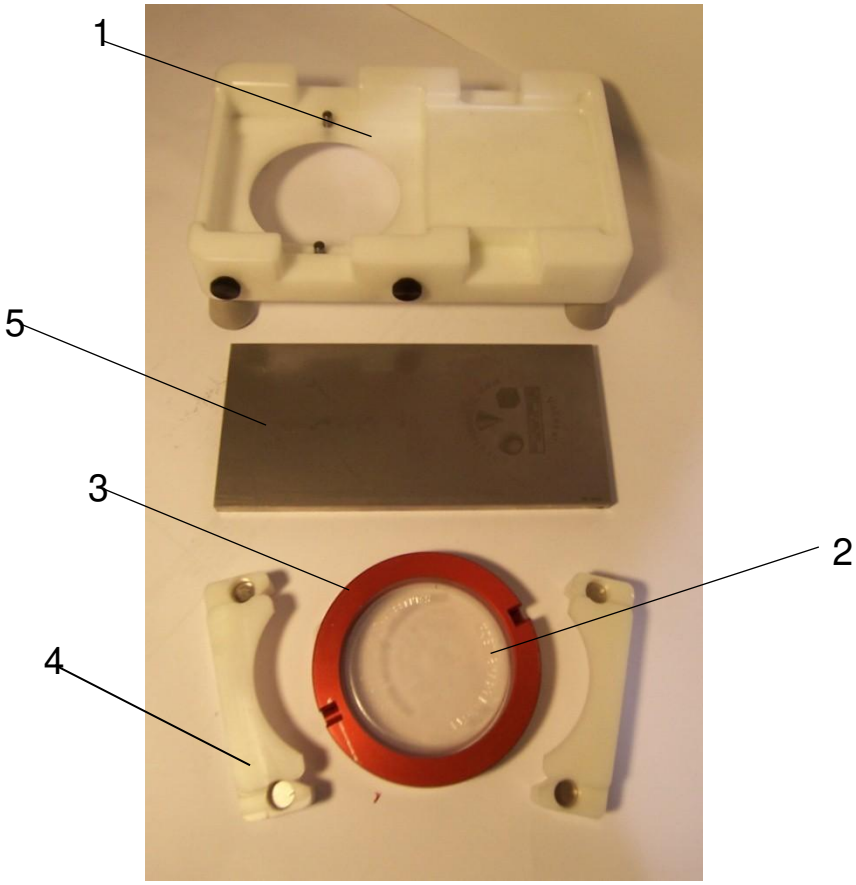

Illustration 2-1. Cliché assembly device

Bill of Materials for Ink Cup Assembly			
No.	Description	Part number Aero 90	Part number Aero 60
1	Setup Table	9901-30-001	9901-31-001
2	ExpressLiner	9260-20-004 (std) 9260-20-005 (tall)	9260-10-004
3	SpaceFrame	9260-26-100	9260-16-100
4	Magnetic Cup Clamp	9901-30-002	9901-31-002
5	Cliché	Contact Trans Tech	Contact Trans Tech

1.3.2. Installation of the Cliché and Ink Cup

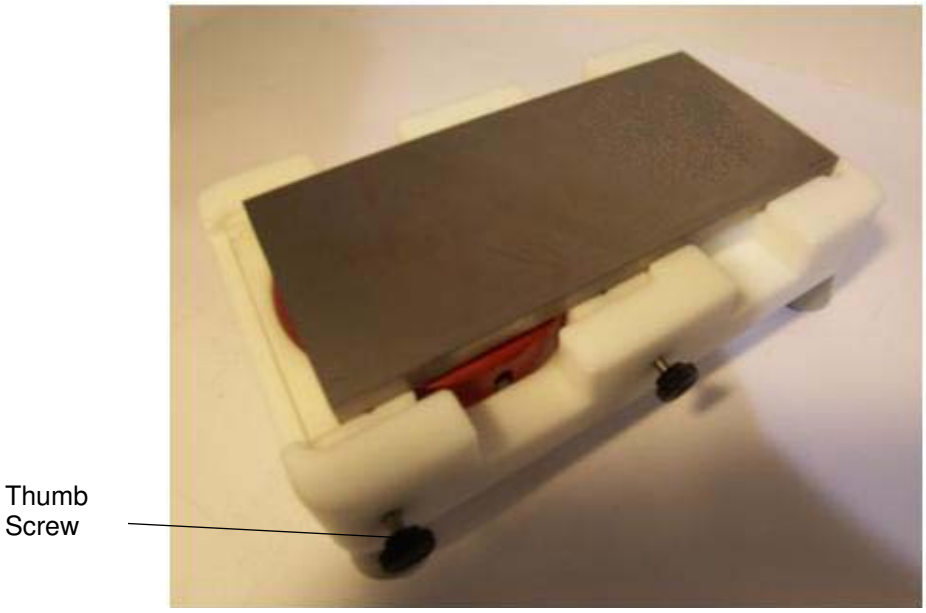

Illustration 2-2. Ink cup assembled on assembly table

When preparing the ink cup to be placed into the machine for printing, proceed as described in the following instruction:

1. Insert both 'MAGNETIC CUP CLAMPS' (4) with the top down into the 'SETUP TABLE' (1) Tighten thumb screws snuggly to retain clamps.
2. Place the ExpressLiner (2) with the opening up into the SpaceFrame (3)
3. Place SpaceFrame assembly into 'MAGNETIC CUP CLAMPS' with both dowel pins engaged into the receiver pockets of the cup.
4. Fill ExpressLiner (2) with ink to desired fill level.
5. Place the 'CLICHÉ' (5) carefully with the image facing down. Slide cliché back until it is located firmly against the back and side stops on the 'SETUP TABLE' (1)
6. Loosen thumb screws and carefully lift the ink cup/cliché assembly out of the SETUP TABLE
7. Remove the ink cup assembly from the 'SETUP TABLE' (1)
   Turn the assembly over (the cliché is now on the bottom)
   With side guard open, slide the assembly into the Aero Pad Printer.
8. Close the clamping lever (move counterclockwise) to clamp the ink cup
   Verify that the clamping fingers are properly engaged with the hold down ring
9. Remove the MAGNETIC CUP CLAMPS
10. Mount pad onto magnetic holding base
11. Close machine guard
    The machine is ready to operate

1.3.3 Removal of the Cliché and Ink Cup

When removing the ink cup from the machine, proceed as described in the following instruction:

1. Stop the AERO printer via the ‘STOP’ button in the ‘HOME’ position (Pad forward and up).
2. Open the machine guard and remove pad
3. Place MAGNETIC CUP CLAMPS on the front and rear of the CUP
4. Loosen the cliché clamping screws and move the cliché clamp to clear the cliché
5. Using the T handle ALLEN wrench, turn the machine clamping screw clockwise to lift the clamping fingers clear of the ‘HOLD DOWN RING’ (3)

If the machine has been assembled for an extended period of time, accumulation of ink may inhibit the removal of the cliché’. This may cause the ink cup to pull free from the cliché’ and to spill the ink. Verify that the cliché’ and ink cup slide out together!

6. Draw the cup/cliché assembly out of the machine and turn it over with the ink cup facing down
7. Set assembly into the ‘SETUP TABLE’ (1) and tighten the thumb screws
8. Slide the cliché off the ink cup. The ink remaining on the cliché will be stripped off

If the printing machine will not be in operation for an extended time, the ink can remain in the cup without deterioration of the ink.

1.3.4 Handling of the Ink Cup

- Always protect the doctor ring in the ink cup from being damaged
- When not in use, place cup assembled with the cliché and clamped with the 'CLAMPING TOOL' (4) in the 'SETUP TABLE (1)' as shown in illustration 2.3
- If stored separately, place the ink cup in the protective plastic container
- Rotate the cup frequently (steel cliché 2 hrs., polymer cliché 1 hr.) while in operation

WARNING

The doctor ring has a very sharp edge that may cause personal injury if improperly handled.

PLEASE HANDLE WITH CAUTION!

1.4. Operating Controls

1.4.1. Description of the Operating Panel

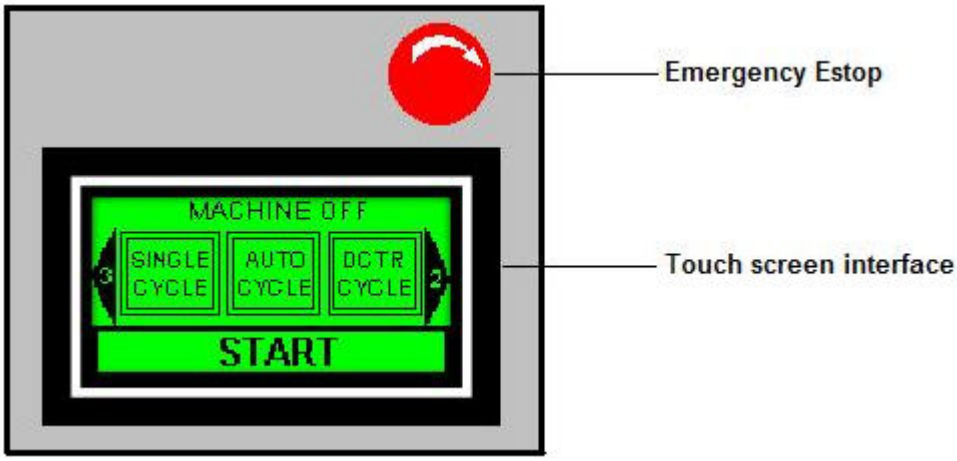

1.4.2. The Operating Control Functions

Button	Description	Result
Touch Screen	Active when power is on	All setup, operating mode, start and stop command and manual functions are input via the touch screen.
E-Stop	Press to activate. Pull to release.	Interrupts power to inputs and outputs. Machine motion is immediately disabled. The machine may continue to move for a short distance after E-STOP is pressed.
Pad stroke down limit	Adjust the pad down stroke limit	Loosen lock screw before making adjustment. Move slide up to shorten stroke. Move slide down to lengthen stroke. Tighten lock screw after making adjustment.
Flow controls	Adjust the speed of the pad ram. Adjust the speed of the pad slide.	Loosen the lock ring. Turn knurled screw clockwise to slow down movement. Turn knurled screw counterclockwise to speed up movement. Tighten lock ring after making adjustment
Foot Switch And START button on control screen	Stop and start the printer.	When in single cycle mode, pressing the foot pedal or the START button will start the print cycle. When in continuous cycle mode, pressing the foot pedal once or pressing the START button will start the print cycle. Pressing the foot pedal again will stop the printer at the end of the active step of the print cycle. Press again to continue the print cycle.

1.4.3. **Screen Map**

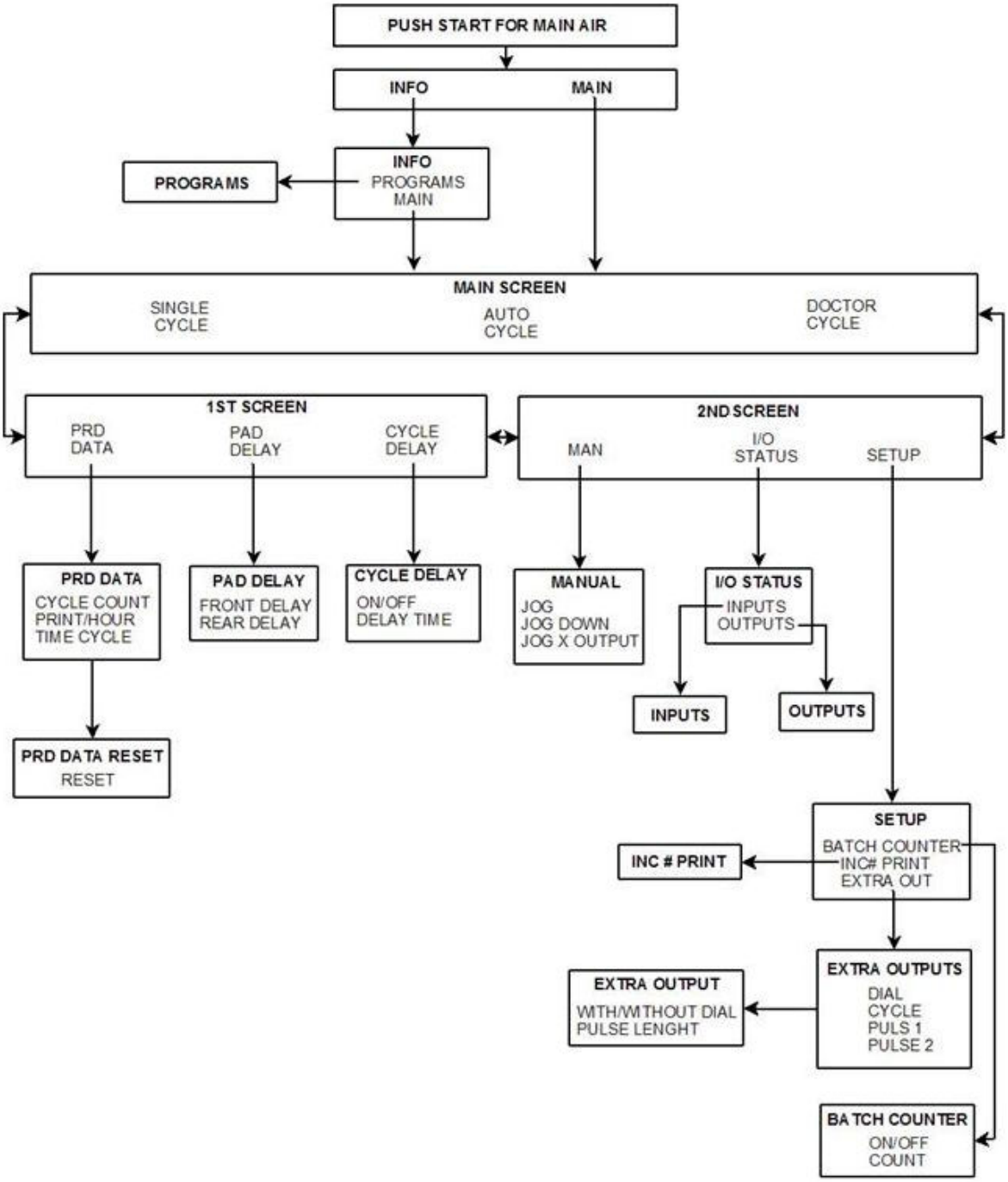

1.5. Setup

1.5.1. Boot Up Screen

Normal Boot up screen after power on

Boot up screen after start button is pressed

Touch to jump to the Info screen

Touch to jump to Main screen

1.5.2. Screen Info

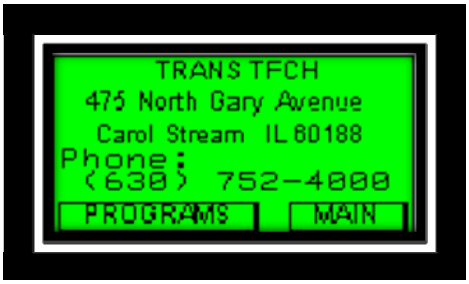

Info screen

Programs version.

Touch to jump to the PROGRAMS SCREEN

1.5.3. **Main Screen after MAIN button pressed**

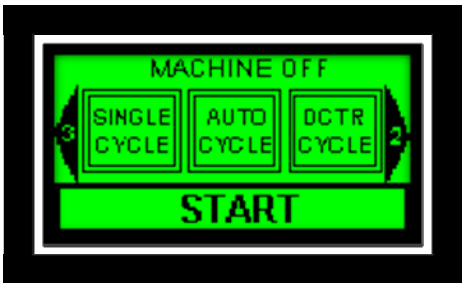

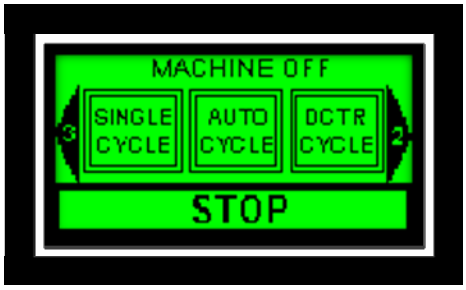

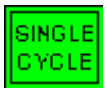

Touch Single Cycle to select Single

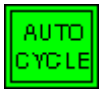

Touch Auto Cycle to select Auto Cycle mode

Touch Doctor Cycle to select Doctor Cycle mode

After cycle mode is selected press Start

Press the STOP button to initiate a cycle stop.
*Note: The machine will not stop immediately. It will complete the active cycle and then stop in the home position.

Touch arrow button to jump to the 2nd screen

Touch arrow button to jump to the 3nd screen

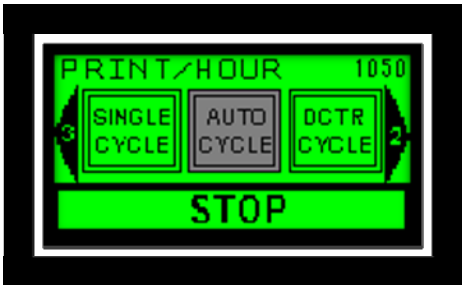

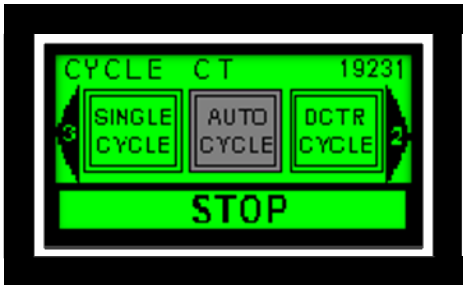

*Note: During the cycle PRINT/HOUR and CYCLE CT are display.

1.5.4. **Second Screen**

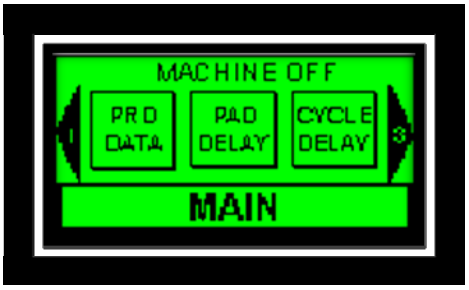

Touch PRD DATA button to jump to the PRODUCTION DATA screen.

Touch PAD DELAY button to jump to the PAD DELAY setup screen

Touch CYCLE DELAY button to jump to the CYCLE DELAY setup screen

Touch Main Button to jump back to the MAIN screen

1.5.5. **PRD Data**

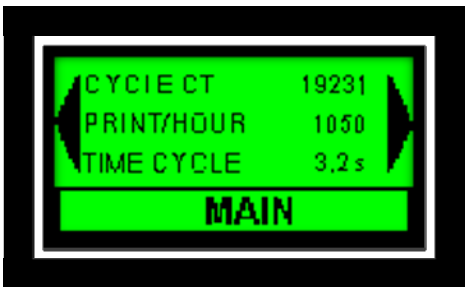

Display Cycle Count
Display Print per Hour
Display Time Cycle Screen

Touch arrow button key to jump to the Production Data Reset Screen

1.5.6. **PRD Data Reset**

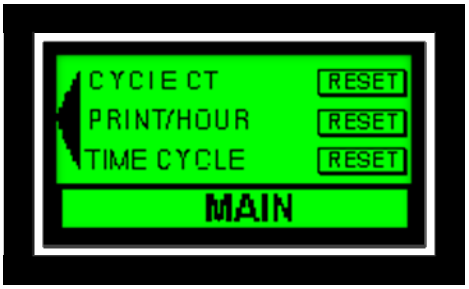

Resets the Cycle Count to 0
Resets the Print/Hour to 0
Resets the Cycle Time to 0

Touch desired RESET button to reset Production Data

1.5.7. **Pad Delay**

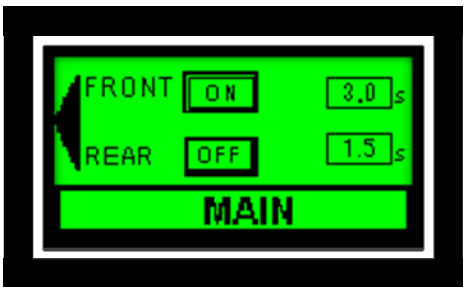

FRONT DELAY – causes printer to stop in the front and up position after printer has picked up ink but before it has printed the part.
REAR DELAY – causes printer to stop in rear and up position before the printer has picked up ink

Touch the button to disable/ enable PAD DELAY

Touch the cell to display a numeric keypad where the PAD DELAY can be changed.
Min. value = 0.0s,
Max. Value = 10.0s

1.5.8. **Cycle Delay**

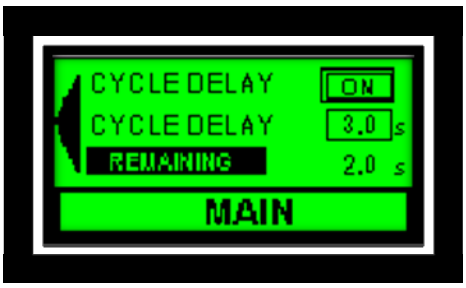

CYCLE DELAY will delay the printer at the end of its print cycle after the preset time delay has occurred in Continuous mode.

Touch the button to disable/ enable CYCLE

Touch the cell to display a numeric keypad where the PAD DELAY can be changed. Min. value = 0.0s,
Max. Value = 10.0s

Displays the remaining time of CYCLE DELAY

1.5.9. **Third Screen**

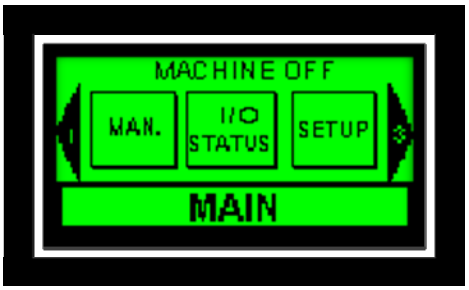

Touch to jump to MANUAL FUNCTION screen

Touch to jump to I/O STATUS screen

Touch to jump to the MACHINE SETUP Screen

1.5.10. **Manual Setup**

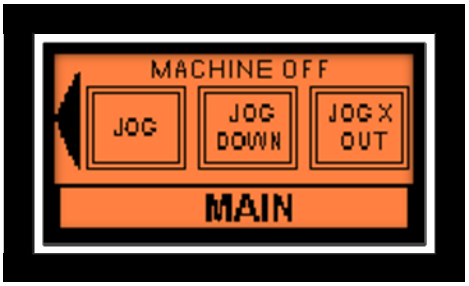

Default display for Manual screen.
*Note:
1. The production count will not increment in JOG mode.
2. The PAD DELAY is not active in JOG mode.

The printer completes **one** step of the printer cycle **each** time the Jog button is pressed.

The pad ram will complete **one** down/up cycle **each** time the JOG DOWN button is pressed.

If an extra output has been installed and enabled, the machine will index/pulse/trigger when the JOG X OUT button is pressed.

1.5.11. **I/O Status**

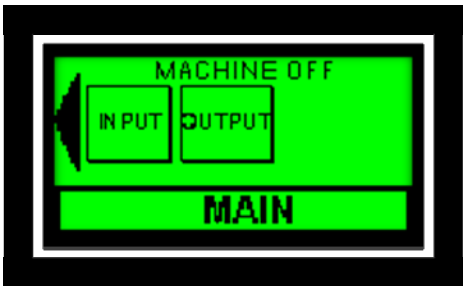

Touch Input button to jump to the Input screen

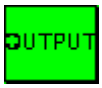

Touch Output button to jump to Output screen

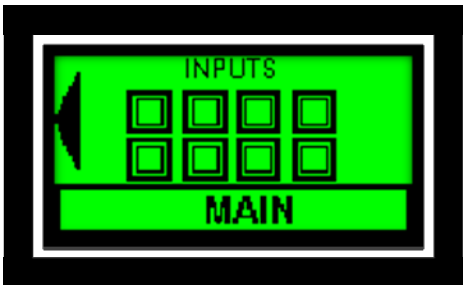

Displays the current status of the PLC inputs

Note:
When input is active the input number is displayed on screen

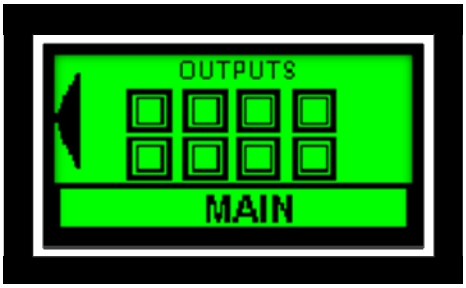

Displays the current status of the PLC outputs

Note:
When output is active the output number is displayed on screen

1.5.12. **Setup Screen**

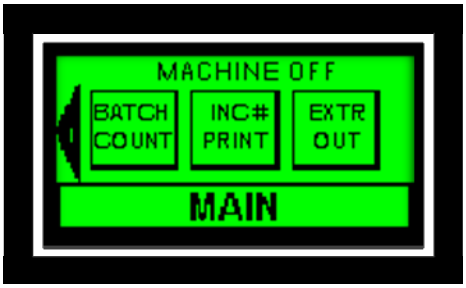

Touch the button to jump to the BATCH COUNT screen

Touch the button to jump to the INC# PRINT

1.5.13. **Batch Counter**

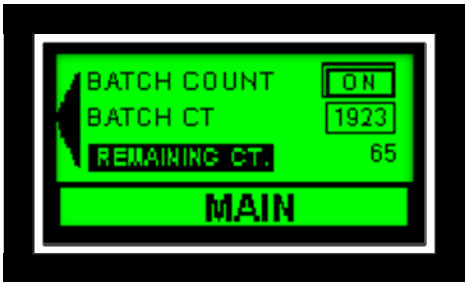

Displays Batch Counter functions
Batch Counter will stop the printer at the end of its print cycle once the preset number of BATCH COUNT print cycles has occurred.

Press the ON/OFF button to disable/enable BATCH COUNTER

Touch the cell to display a numeric keypad. Enter a preset value which will stop the machine when the preset count is achieved.

Displays the remaining count of the batch cycle.

1.5.14. **Increase number of prints per cycle**

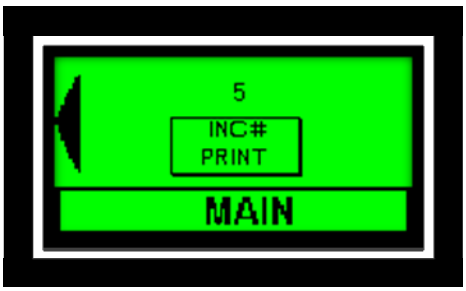

Touch to increase the number of prints per cycle in Single Cycle mode from 1 to 5. Pressing again after 5 will return to 1.

1.5.15. **Alarms**

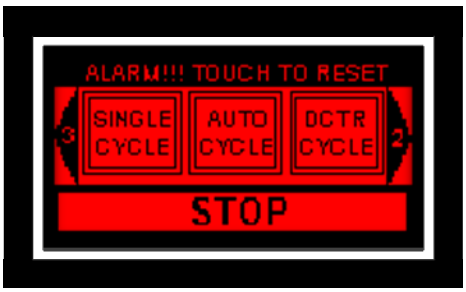

Note:
When an alarm condition is active a message is displayed at the top of the display.
Touch alarm message to review alarms.

Press the Reset button to clear displayed alarms. Use the arrow key to scroll through alarms. Once the alarms are clear the screen will return to green.
Press Back to return to the previous screen.

1.5.16. **Standard Errors**

Error	Action
PAD DOWN PROX	Check bottom proximity switch on vertical cylinder Check up/down valve
PAD REAR PROX	Check rear proximity switch on horizontal cylinder Check pad forward/back valve
E-STOP	Pull E-Stop to release
NO AIR	Check air connection Check down proximity switch Check up/down valve Check pad forward/back valve
BATCH CT. FINISH	Press reset to clear batch count, then press back to go to previous screen

1.6. Electrical Schematics

1.6.1. Version 16 Bit PLC

Please see the following pages for electrical schematics for the 16 bit Aero machine.

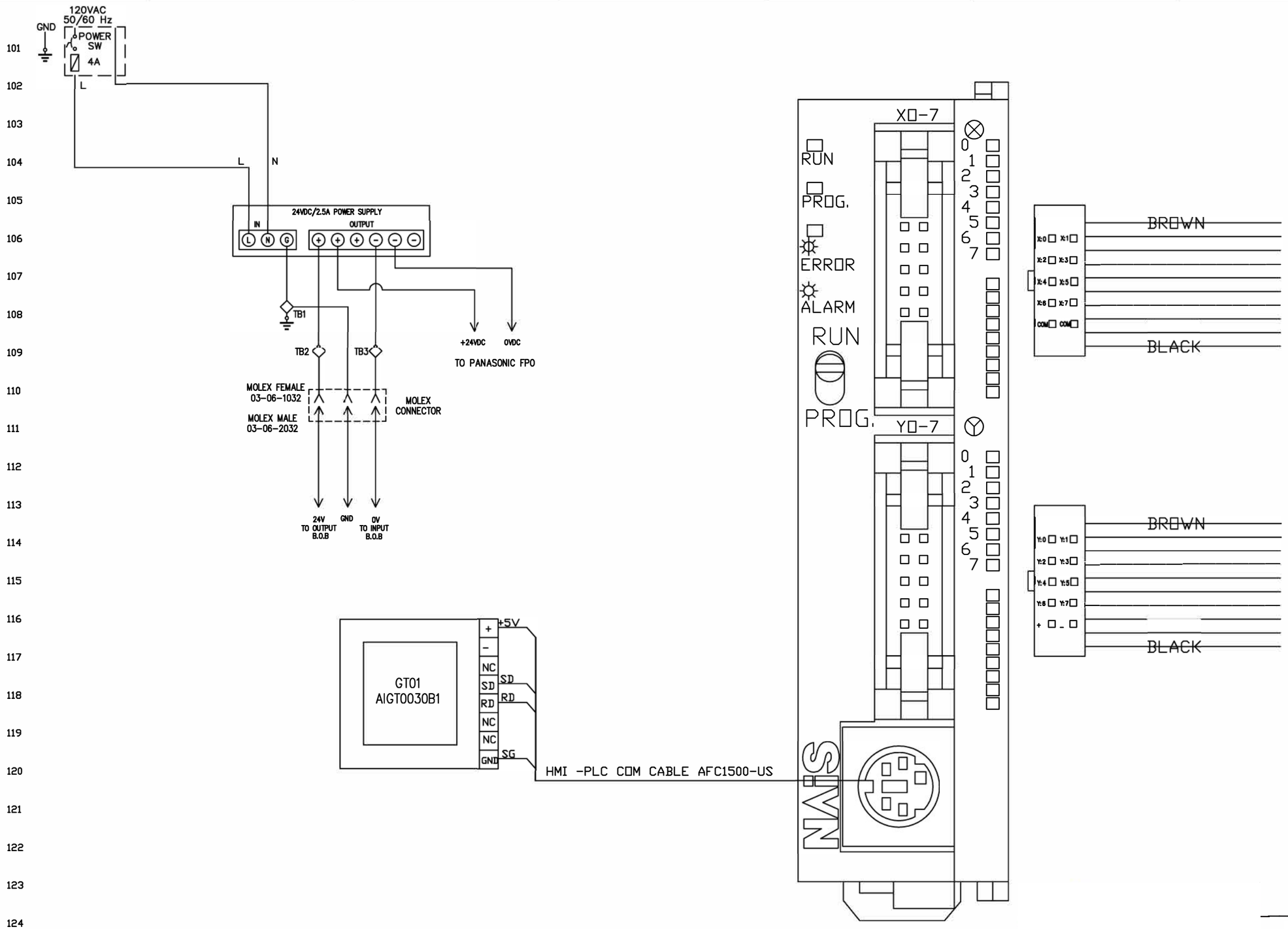

REV.	REVISION DESCRIPTION	BY	DATE

DRAWN BY TK	DATE 01/17/2009	CHKD. BY	DATE
PROJECT NO. H-36		SHEET 1-4	SCALE NONE
DWG. NAME ITW AERO 60/90 MAIN CONTROL SCHEMATIC		DWG. NO. & REV. H36.EL0.001	

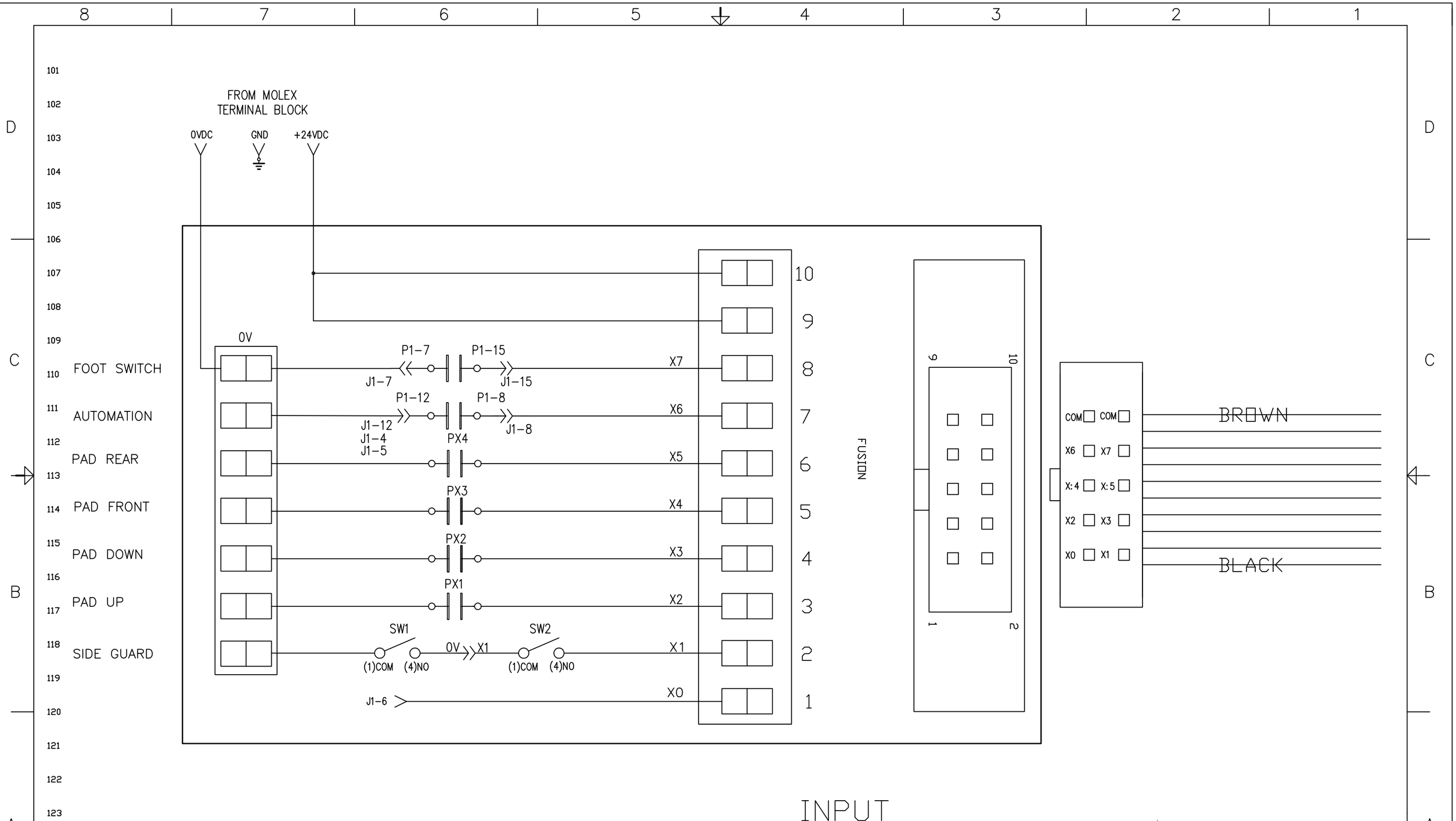

REV.	REVISION DESCRIPTION	BY	DATE	APPD
1	Added SW1 and SW2			

DRAWN BY TK	DATE 01/17/2009	CHKD. BY	DATE
PROJECT NO. H-36		SHEET 2-4	SCALE NONE
DWG. NAME ITW AERO 60/90 INPUT CONTROL SCHEMATIC		DWG. NO. & REV. H36.EL0.002	

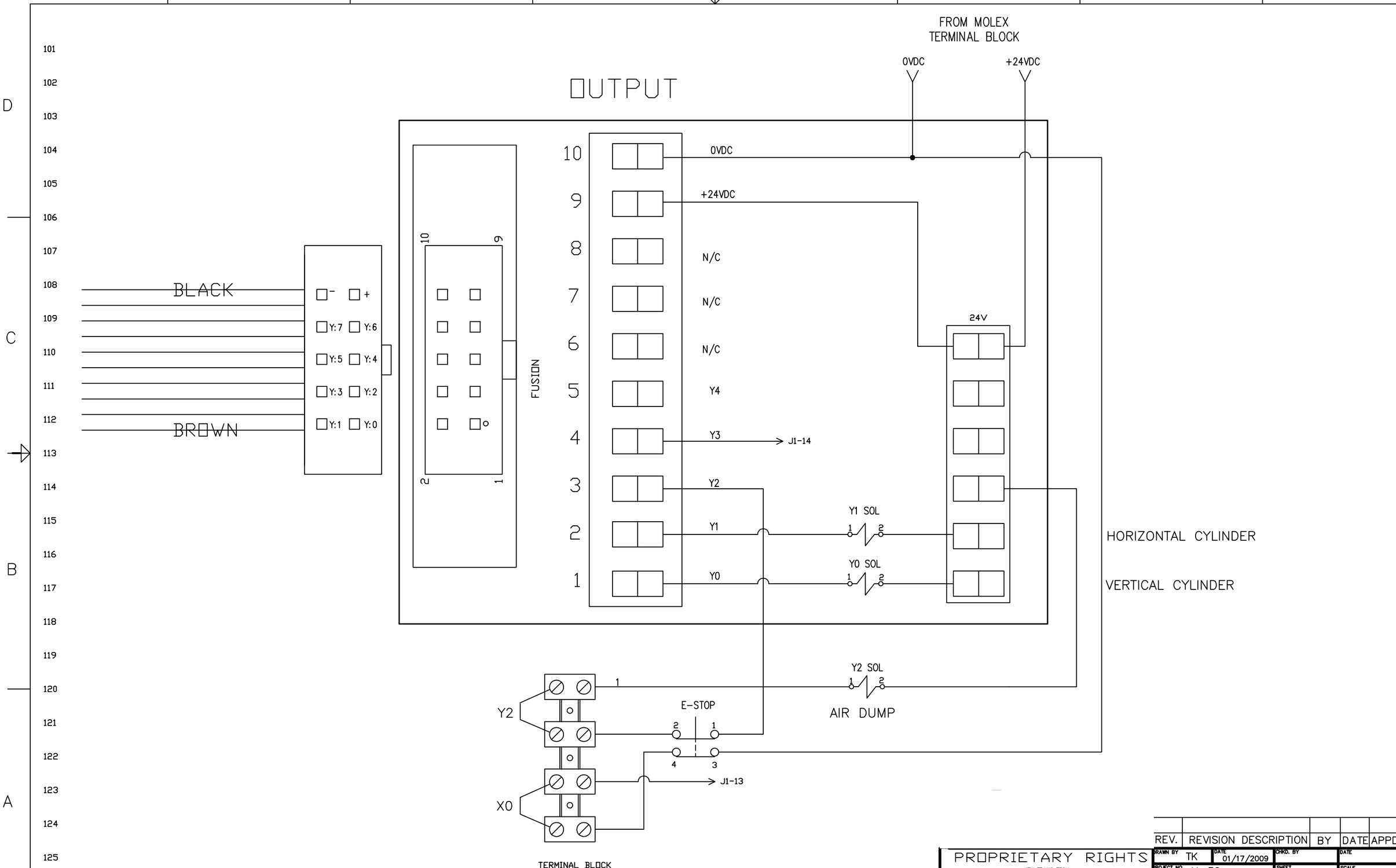

REV.	REVISION DESCRIPTION	BY	DATE	APPD

DRAWN BY TK	DATE 01/17/2009	CHKD. BY	DATE
PROJECT NO. H-36		SHEET 3-4	SCALE NONE
DWG. NAME ITW AERO 60/90 OUTPUT CONTROL SCHEMATIC		DWG. NO. & REV. H36.EL0.003	

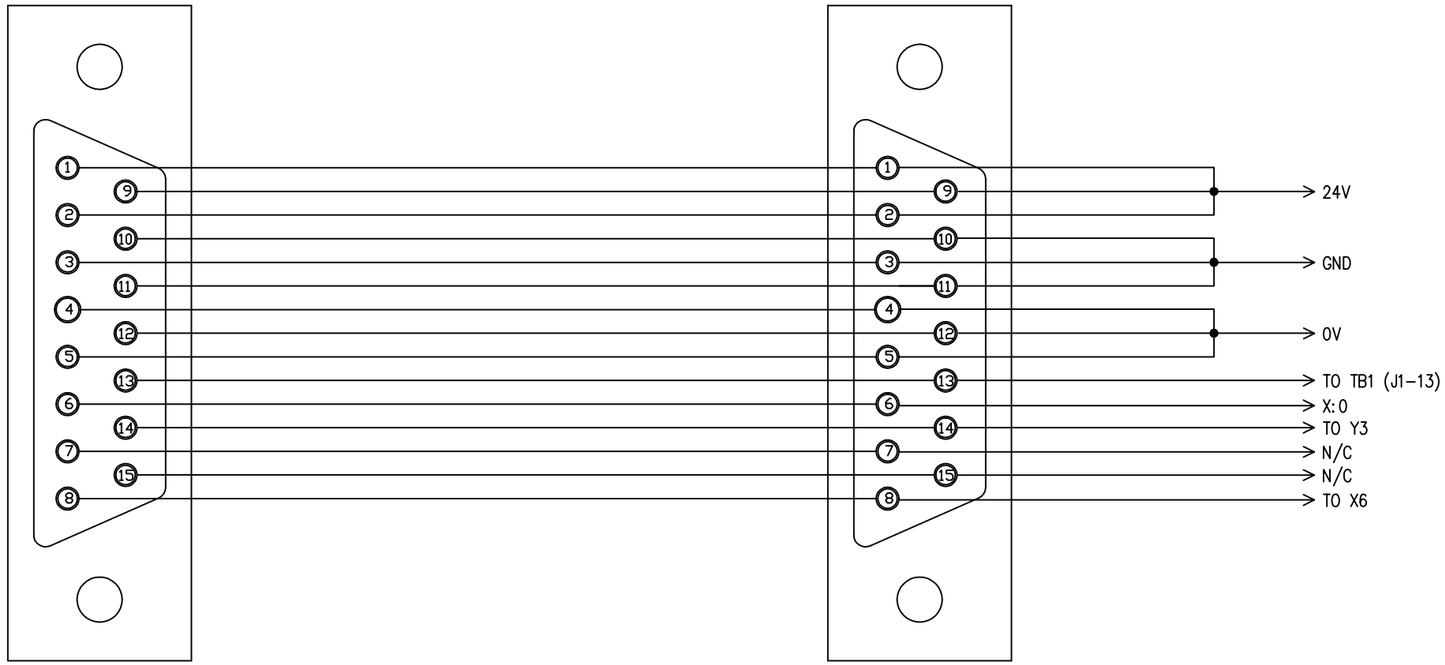

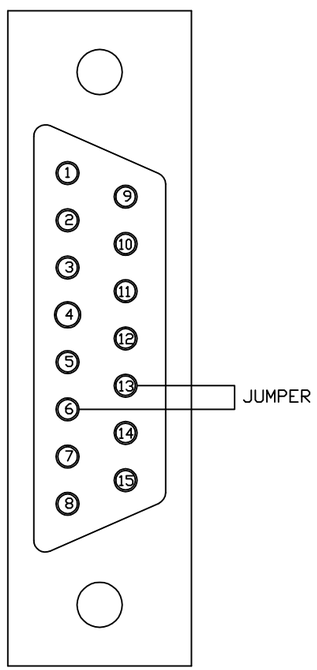

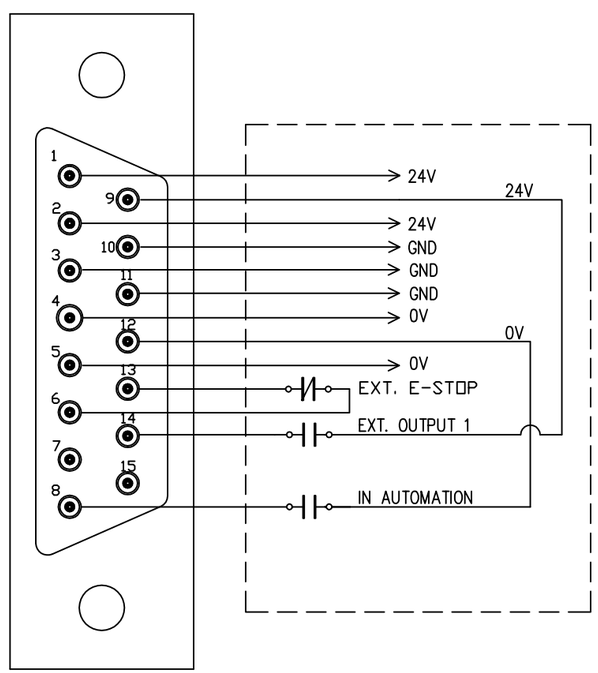

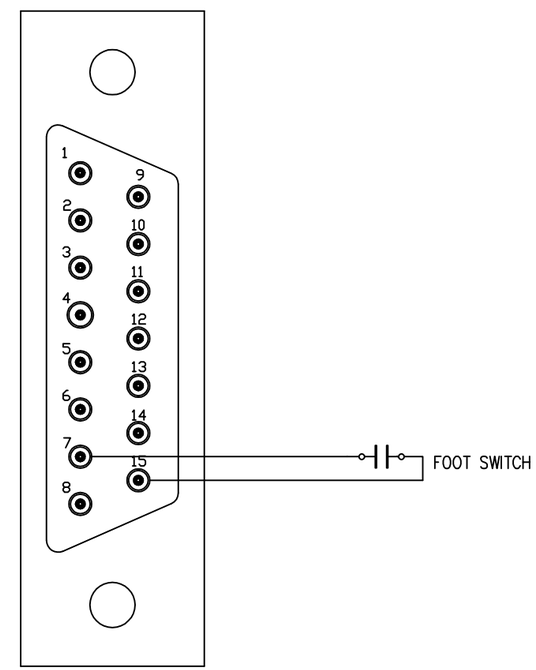

REV.	REVISION DESCRIPTION	BY	DATE	APPD

DRAWN BY TK	DATE 01/17/2009	CHKD. BY	DATE
PROJECT NO. H-36		SHEET 4-4	SCALE NONE
DWG. NAME ITW AERO 60/90 FOOT CONTROL SCHEMATIC		DWG. NO. & REV. H38.EL0.004	

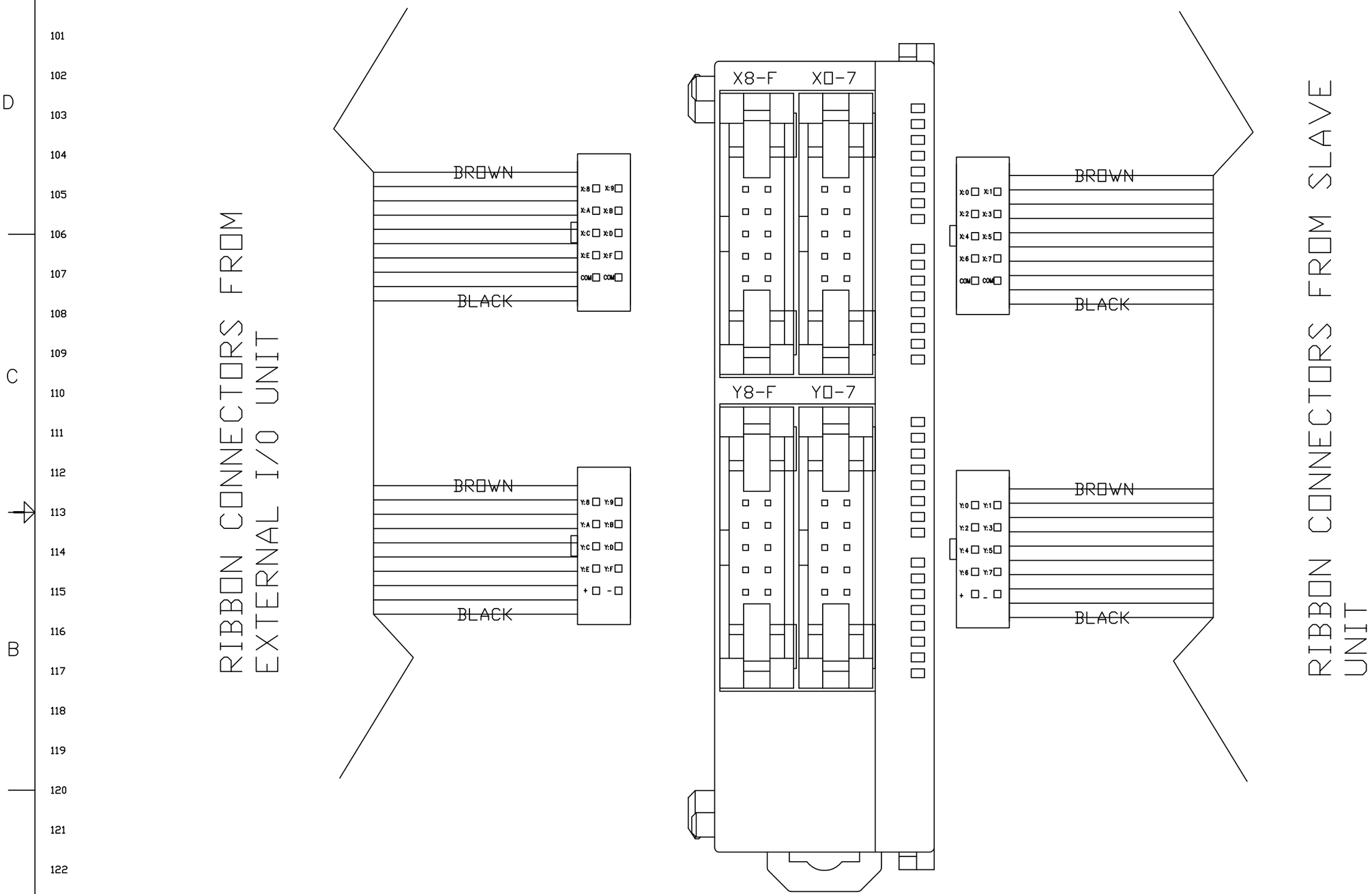

REV.	REVISION DESCRIPTION	BY	DATE	APPD

DRAWN BY SJM	DATE 10/17/2008	CHKD. BY	DATE
PROJECT NO. H-38		SHEET 5-5	SCALE NONE
DWG. NAME ITW VALUELINE 130 OPTIONAL I/O SCHEMATIC		DWG. NO. & REV. H38.EL0.005	

1.6.2. Version 32 Bit PLC

Please see the following pages for electrical schematics for the 32 bit Aero machine.

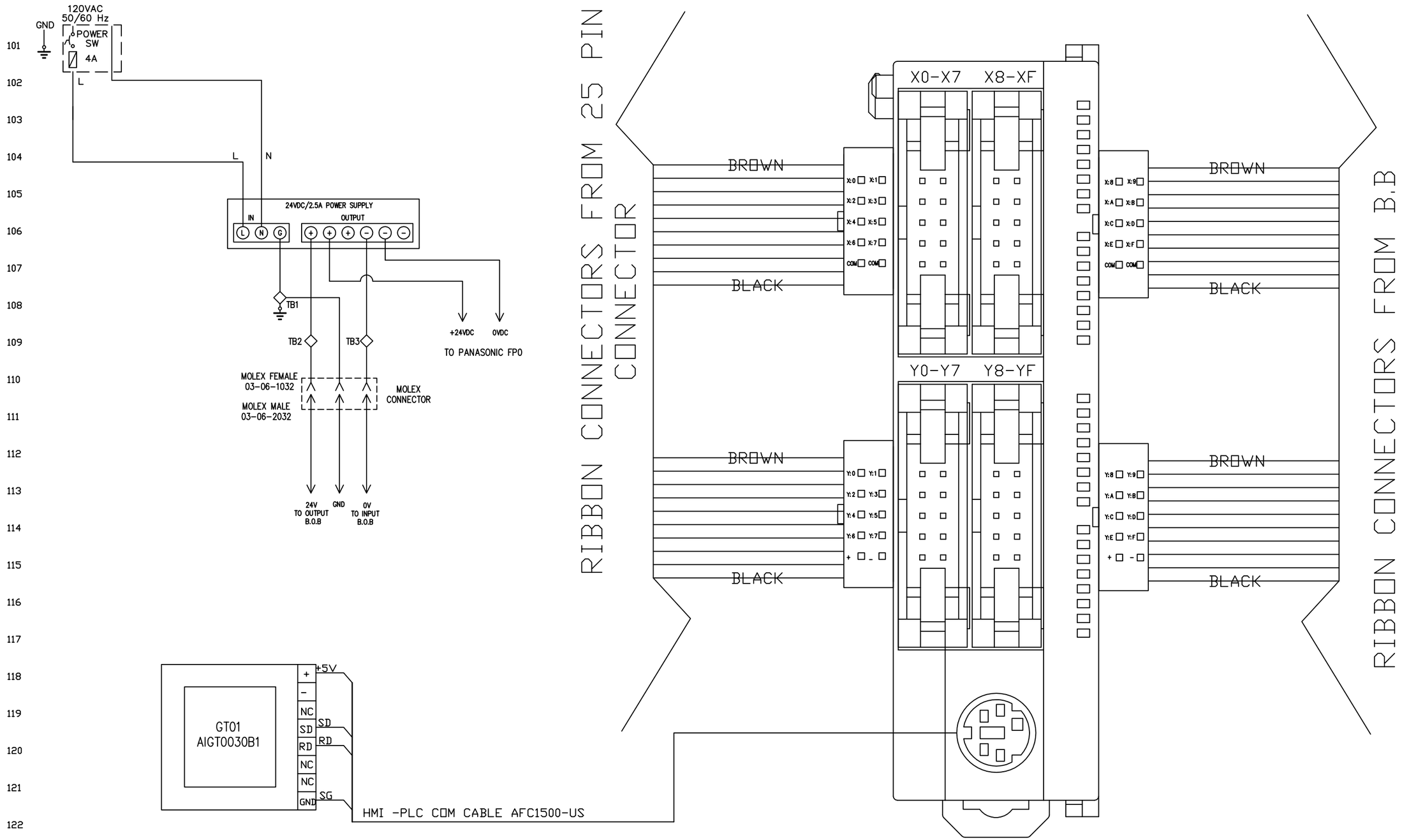

REV.	REVISION DESCRIPTION	BY	DATE
1	Updated T.B.	SJM	022009

DRAWN BY TK	DATE 02/09/2009	CHKD. BY	DATE
PROJECT NO. H-36		SHEET 1-7	SCALE NONE
DWG. NAME ITW AERO 60/90 MAIN CONTROL SCHEMATIC		DWG. NO. & REV. H36.EL1.001	

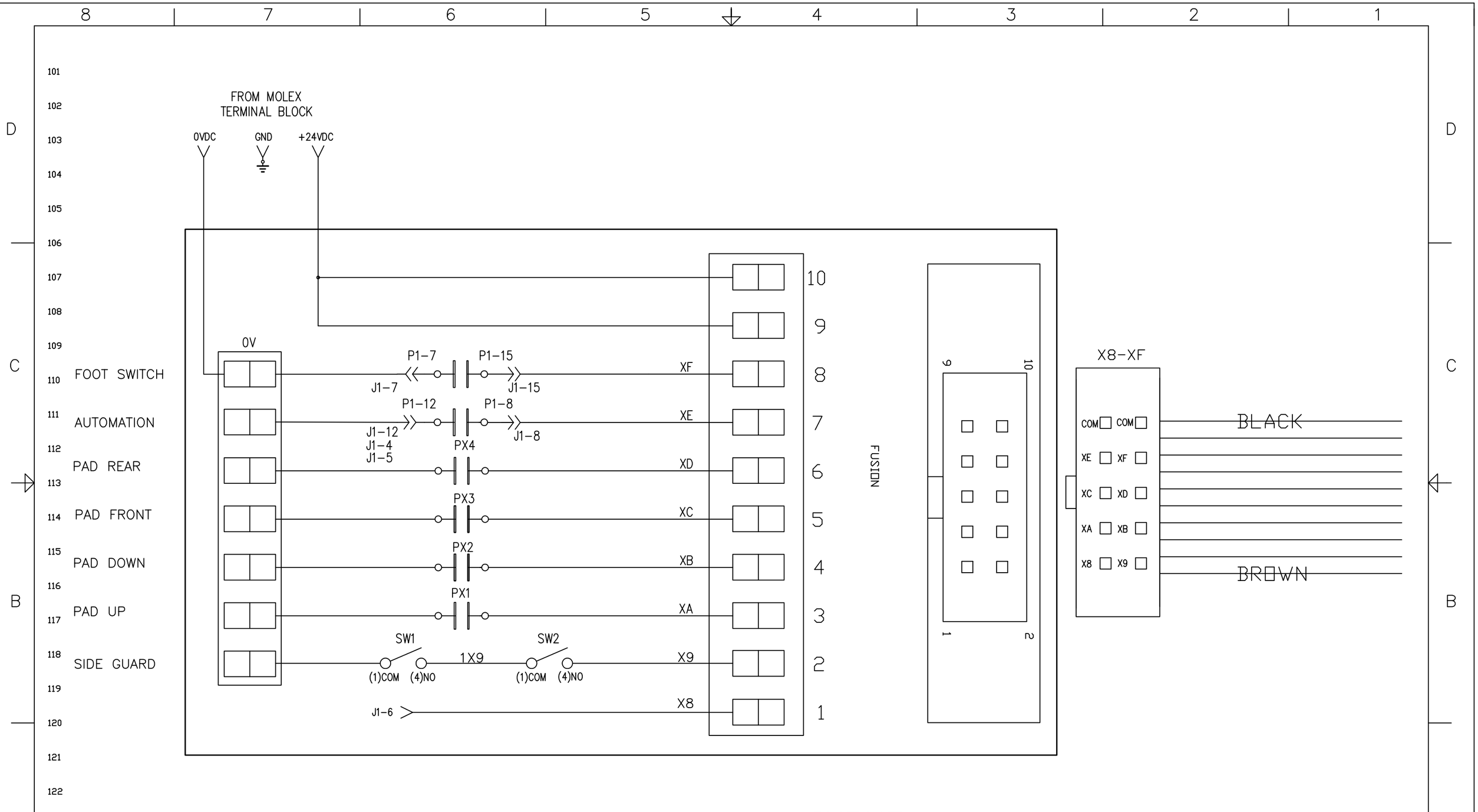

REV.	REVISION DESCRIPTION	BY	DATE
1 1	Updated T.B.	SJM	022009

DRAWN BY TK	DATE 02/09/2009	CHKD. BY	DATE
PROJECT NO. H-36		SHEET 2-7	SCALE NONE
DWG. NAME ITW AERO 60/90 INPUT CONTROL SCHEMATIC		DWG. NO. & REV. H36.EL1.002	

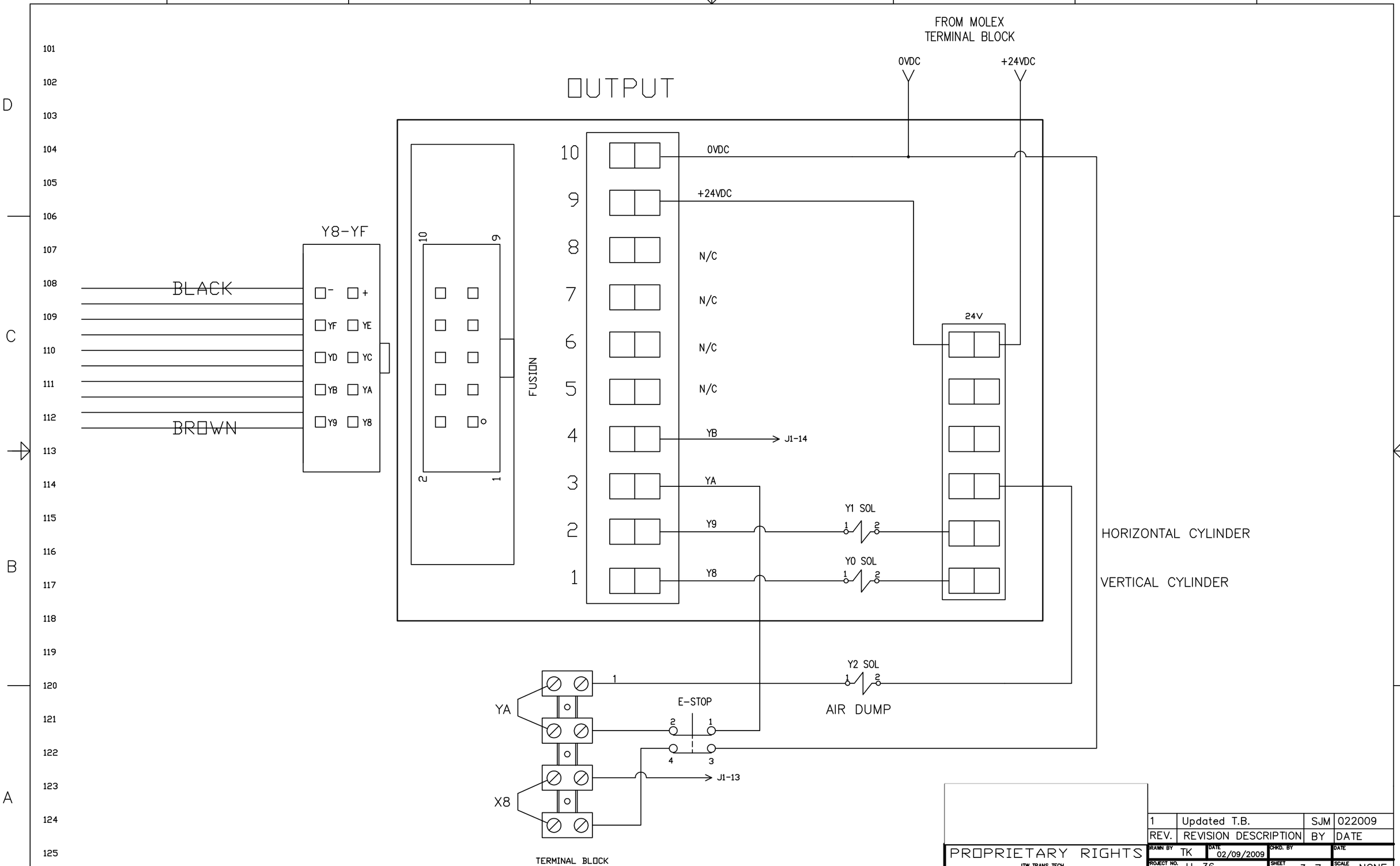

REV.	REVISION DESCRIPTION	BY	DATE
1	Updated T.B.	SJM	022009

DRAWN BY TK	DATE 02/09/2009	CHKD. BY	DATE
PROJECT NO. H-36		SHEET 3-7	SCALE NONE
DWG. NAME ITW AERO 60/90 OUTPUT CONTROL SCHEMATIC		DWG. NO. & REV. H36.EL1.003	

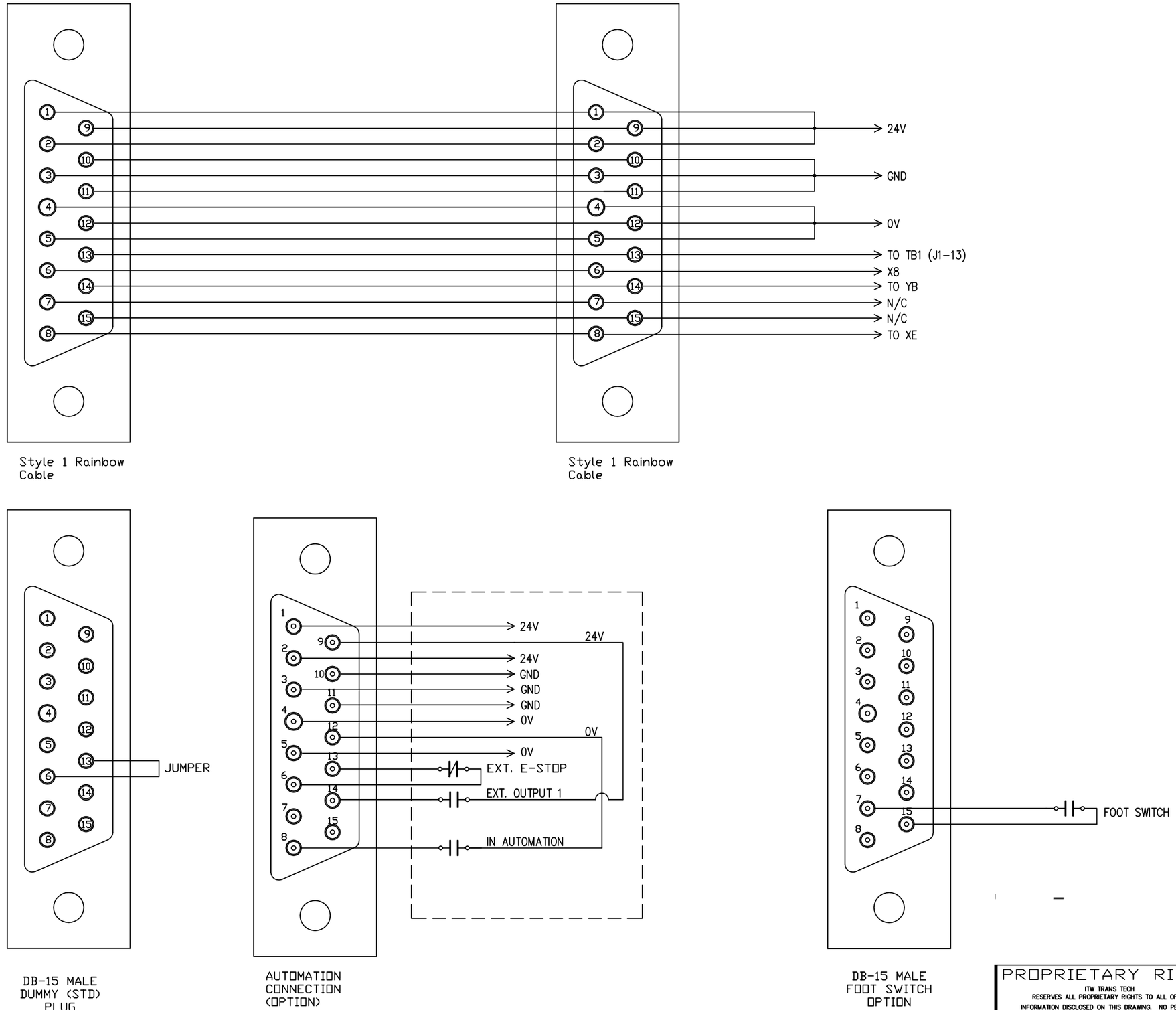

REV.	REVISION DESCRIPTION	BY	DATE
1	Updated T.B.	SJM	022009

DRAWN BY TK	DATE 02/09/2009	CHKD. BY	DATE
PROJECT NO. H-36		SHEET 4-7	SCALE NONE
DWG. NAME ITW AERO 60/90 FOOT CONTROL SCHEMATIC		DWG. NO. & REV. H36.EL1.004	

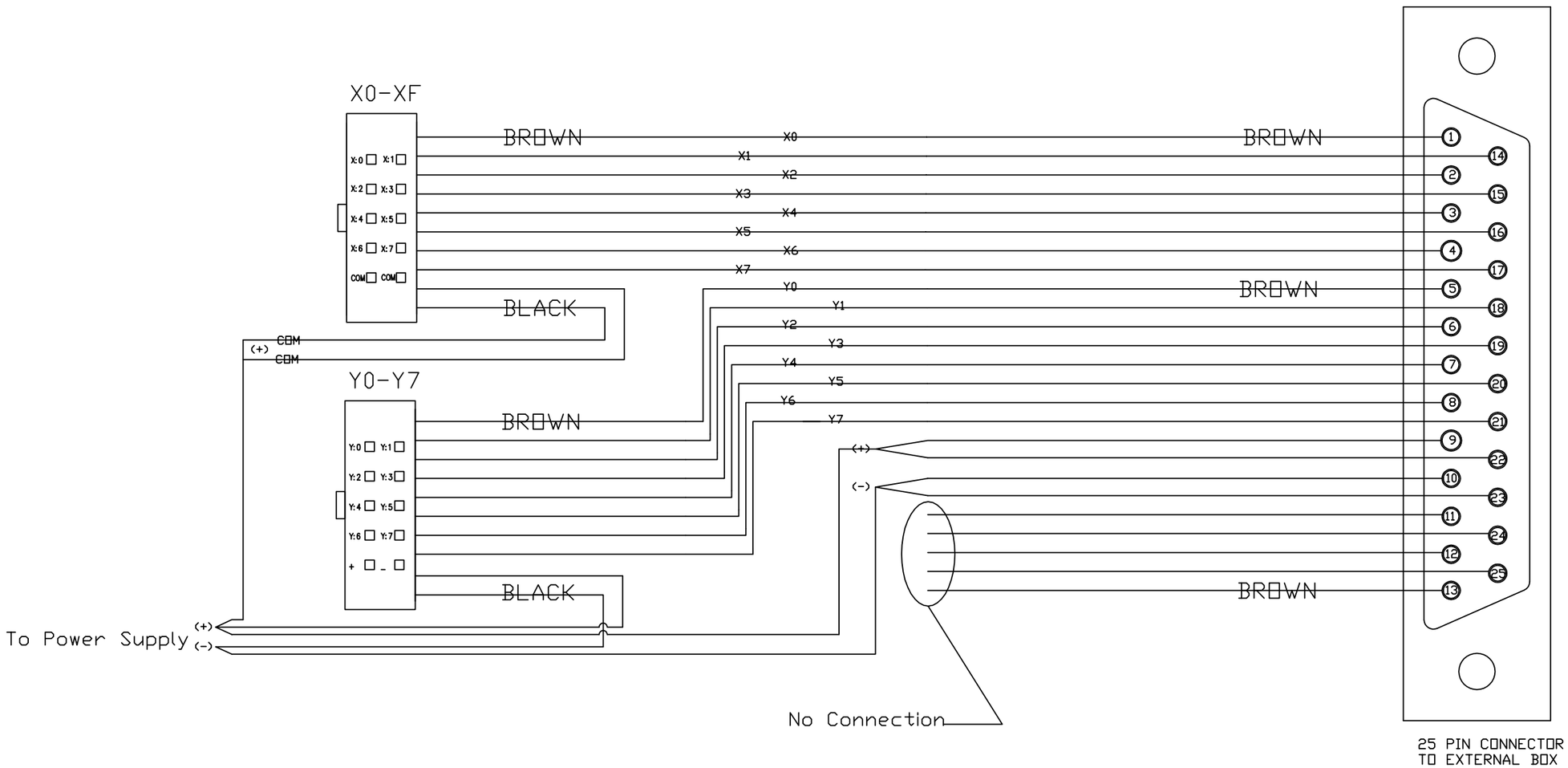

REV.	REVISION DESCRIPTION	BY	DATE
1	Updated T.B.	SJM	02/20/09
3	Updated Wiring	SM	02/07/09
2	Updated Wiring	SM	02/06/09

DRAWN BY: TK	DATE: 02/09/2009	CHKD. BY:	DATE:
PROJECT NO.: H-36		SHEET: 5-7	SCALE: NONE
DWG. NAME: ITW AERO 60/90 EXTERNAL I/O		DWG. NO. & REV.: H36.EL1.003	

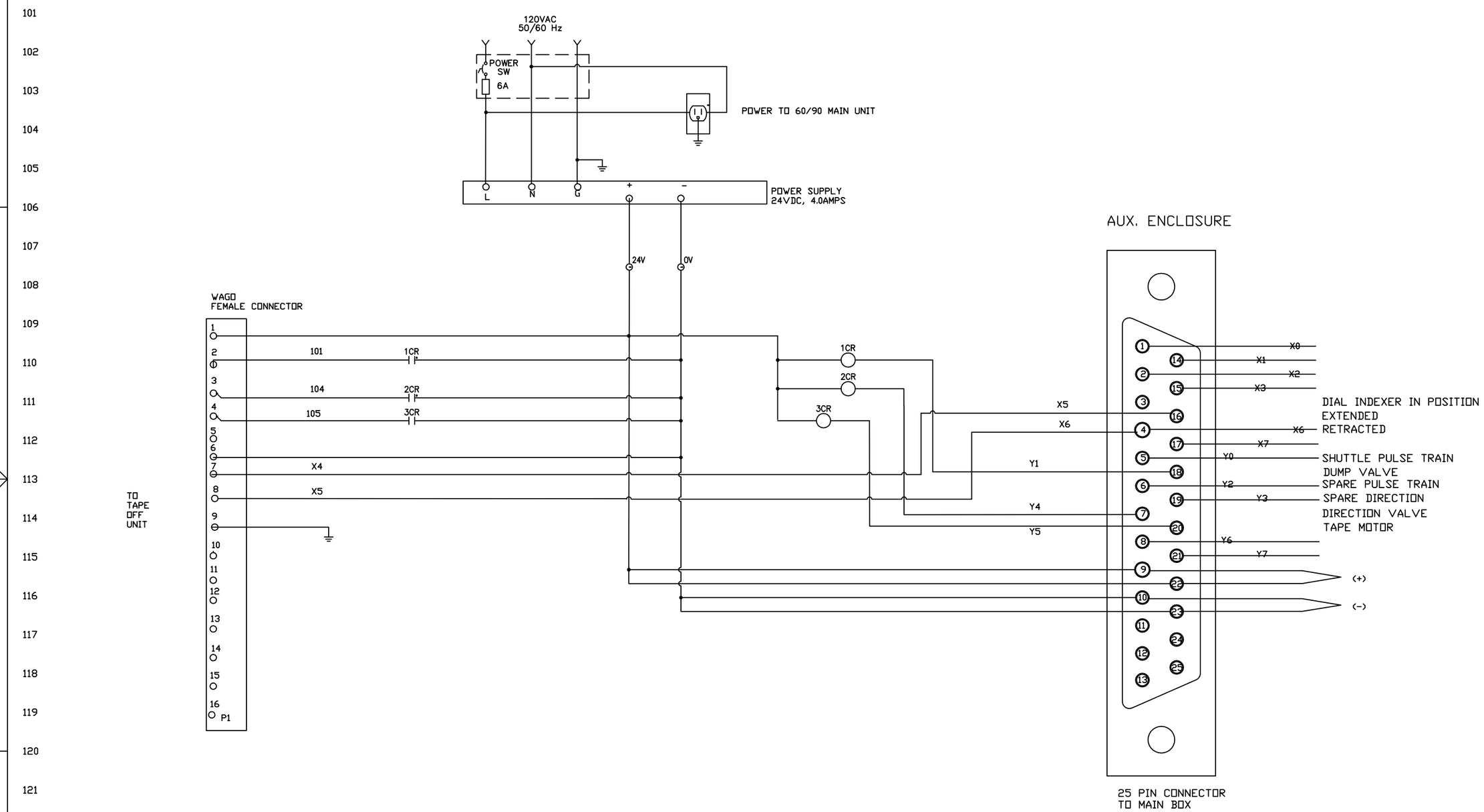

REV.	REVISION DESCRIPTION	BY	DATE

DRAWN BY RKP	DATE 03/25/2009	CHKD. BY	DATE
PROJECT NO. H-36		SHEET 6-7	SCALE NONE
DWG. NAME ITW AERO 60/90 ACCESSORY UNIT		DWG. NO. & REV. H36.EL1.003	

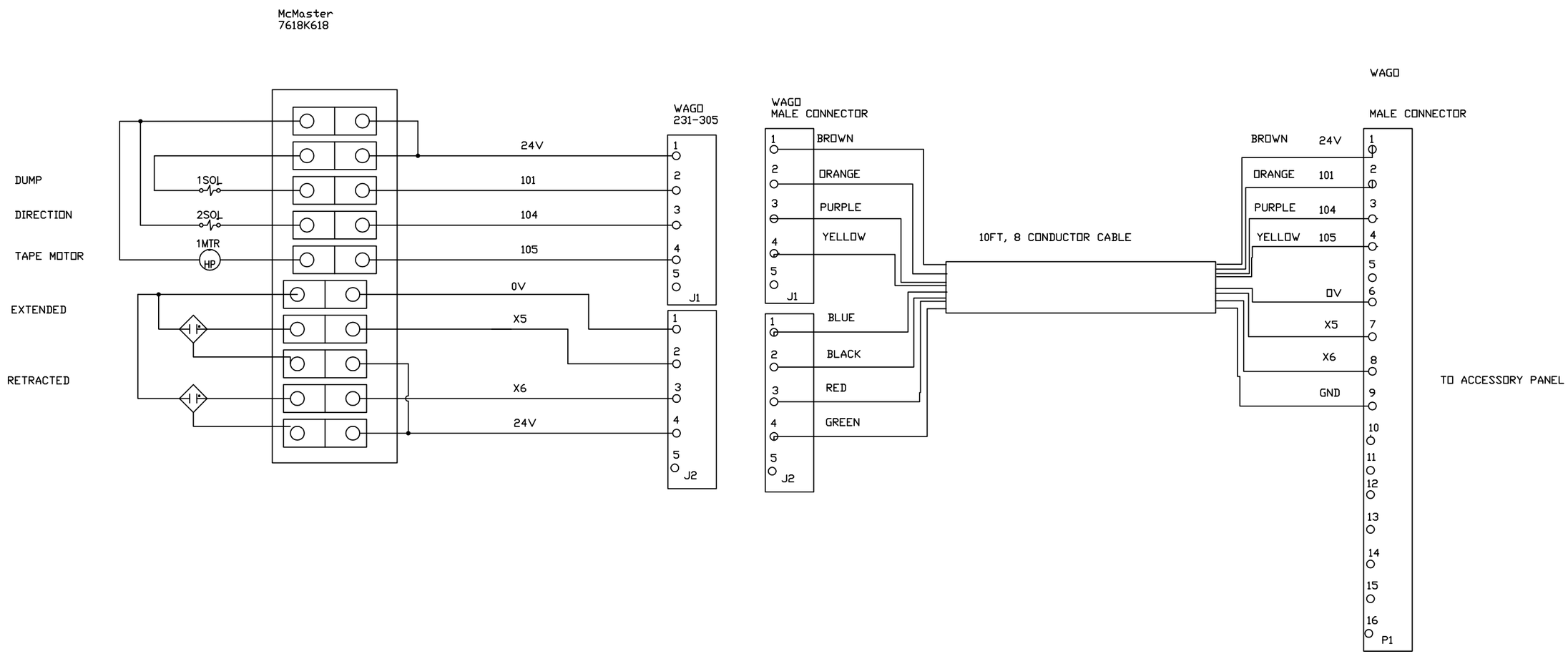

REV.	REVISION DESCRIPTION	BY	DATE

DRAWN BY RKP	DATE 03/25/2009	CHKD. BY	DATE
PROJECT NO. H-36		SHEET 7-7	SCALE NONE
DWG. NAME ITW AERO 60/90 TAPE OFF		DWG. NO. & REV. H36.EL1.003	

1.7. Pneumatic Schematics

Please see the following pages for pneumatic schematic for the 16 and 32 bit Aero machine.

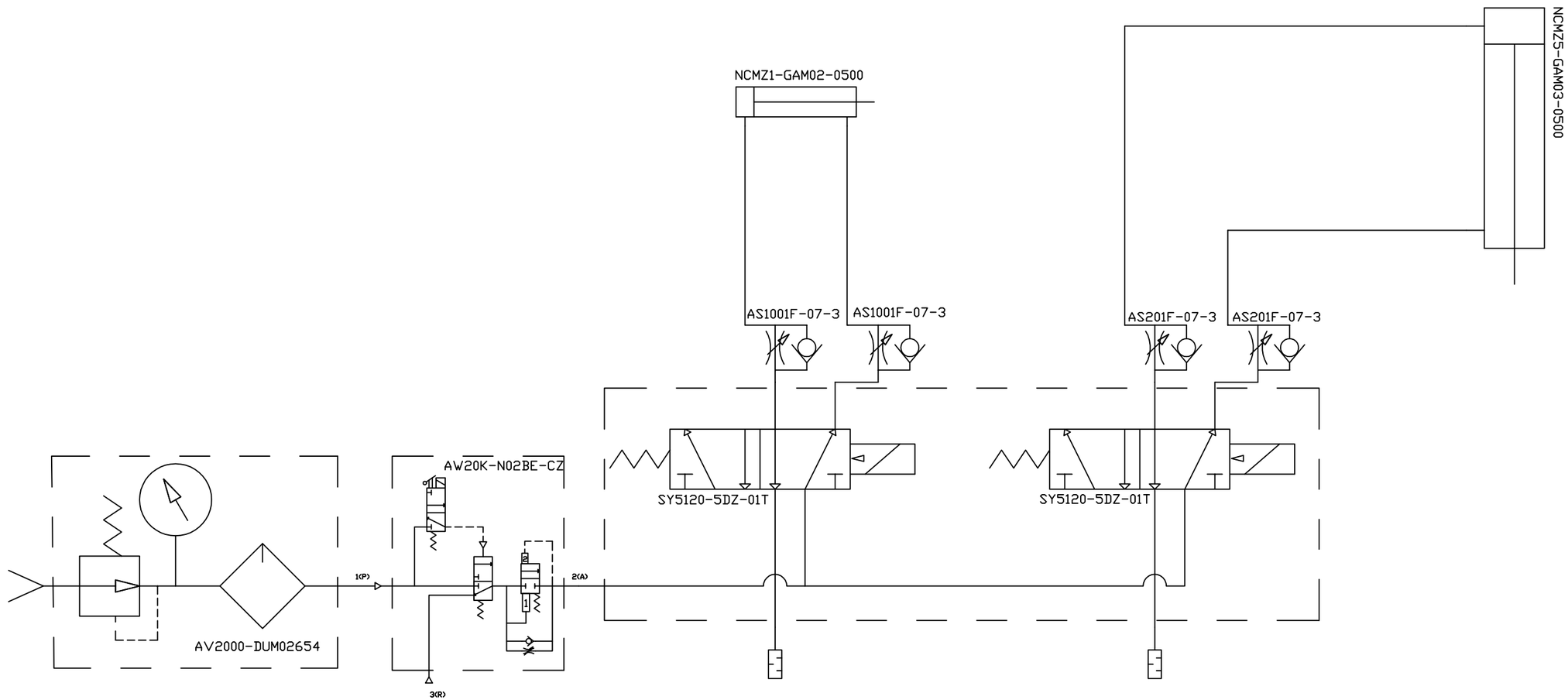

1	Added Dump Valve	SJM	4/23/2009
	REVISION DESCRIPTION	BY	DATE

DRAWN BY SJM	DATE 04/23/2009	CHKD. BY	DATE
PROJECT NO. H-36		SHEET 1-1	SCALE NONE
DWG. NAME VALUE LINE PNEUMATIC		DWG. NO. & REV. H36.PN0.001.001	